QuickStart Guide

FortiGate 3800G Series

FG-3800G, FG-3801G, FG-3800G-DC, and FG-3801G-DC

This guide covers: FG-3800G, FG-3801G, FG-3800G-DC, and FG-3801G-DC

October 9, 2026

Copyright © 2026 Fortinet, Inc. All rights reserved. Fortinet®, FortiGate®, FortiCare® and FortiGuard®, and certain other marks are registered trademarks of Fortinet, Inc., and other Fortinet names herein may also be registered and/or common law trademarks of Fortinet. All other product or company names may be trademarks of their respective owners. Performance and other metrics contained herein were attained in internal lab tests under ideal conditions, and actual performance and other results may vary. Network variables, different network environments and other conditions may affect performance results. Nothing herein represents any binding commitment by Fortinet, and Fortinet disclaims all warranties, whether express or implied, except to the extent Fortinet enters a binding written contract, signed by Fortinet's SVP Legal and above, with a purchaser that expressly warrants that the identified product will perform according to certain expressly-identified performance metrics and, in such event, only the specific performance metrics expressly identified in such binding written contract shall be binding on Fortinet. For absolute clarity, any such warranty will be limited to performance in the same ideal conditions as in Fortinet's internal lab tests. Fortinet disclaims in full any covenants, representations, and guarantees pursuant hereto, whether express or implied. Fortinet reserves the right to change, modify, transfer, or otherwise revise this publication without notice, and the most current version of the publication shall be applicable.

For Product License Agreement / EULA and Warranty Terms, visit https://www.fortinet.com/content/dam/fortinet/assets/legal/EULA.pdf

Package Contents

FortiGate 3800G Series

FG-3800G, FG-3801G, FG-3800G-DC, and FG-3801G-DC

FortiGate Device

QuickStart Guide

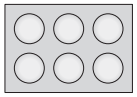

6x Rubber Feet

4x AC Power Cords

1x Ethernet Cable

1x Console Cable

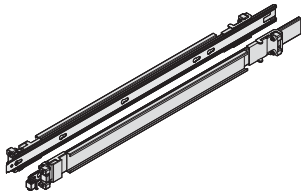

1x Mounting Rail Assembly

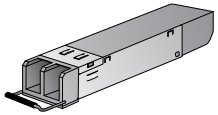

2x SFP28 Transceivers

1x Torx-Security Wrench

4x DC Power Cables
(DC models only)

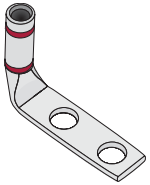

2x Grounding Lugs
(DC models only)

6x Terminal Rings
(DC models only)

The Essentials

Default Logins

https://192.168.1.99
Username: ***admin***
Password**: leave blank**

MGMT1 IP is 192.168.1.99
MGMT2 IP is 192.168.2.99

Admin Guide

For a detailed Getting Started guide, setup and configuration information, refer to the Admin Guide on https://docs.fortinet.com/

Customer Service

For contracts, licensing, product registration and account management, contact FortiCare Support at https://www.fortinet.com/support/contact

Self-service Resources

Access our knowledge base, forums, videos and technical experts at https://www.fortinet.com/support/support-services/forticare-support

Quick Start Guide Online

Please refer to the online version for the most current and up-to-date information about your device at https://docs.fortinet.com/document/fortigate/hardware/fortigate-3800g-series-quickstart-guide

You may also scan the QR code below.

Thank you for choosing Fortinet

Registration

Locate the FortiCloud key label with QR code on the top of your unit.

After scanning the QR code with your phone you'll have the option to register and provision your device using your phone or computer.

Alternatively you can register your device from the GUI or via support.fortinet.com.

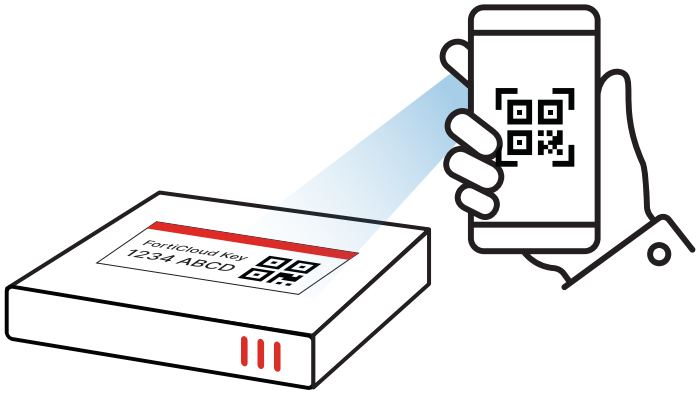

Setup

Unpack the box, power the device, and choose one of the following options:

GUI

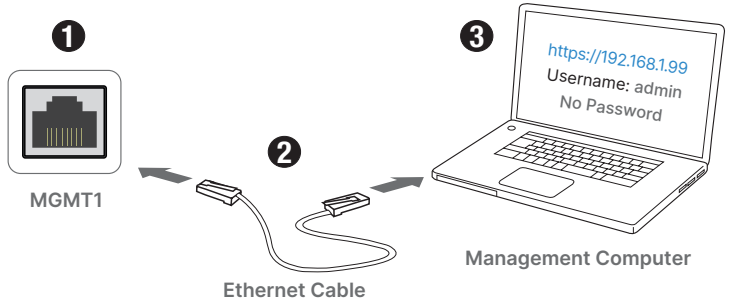

Note: Configure the management computer with IP 192.168.1.x and subnet 255.255.255.0

* Refer to the FAQ for help with the registration process: https://docs.fortinet.com/document/fortigate/hardware/registration-before-device-configuration-faq

CLI

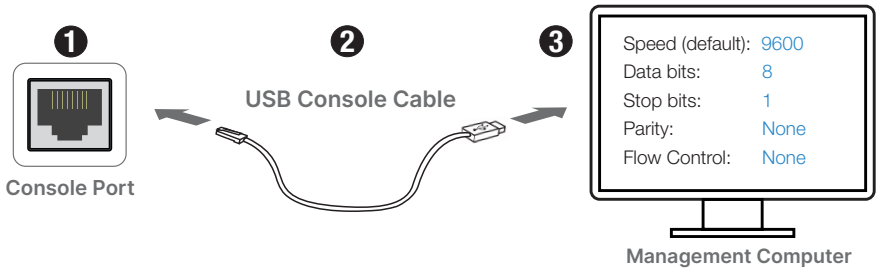

Note: For a detailed CLI guide, visit docs.fortinet.com

SFP Modules

Installation

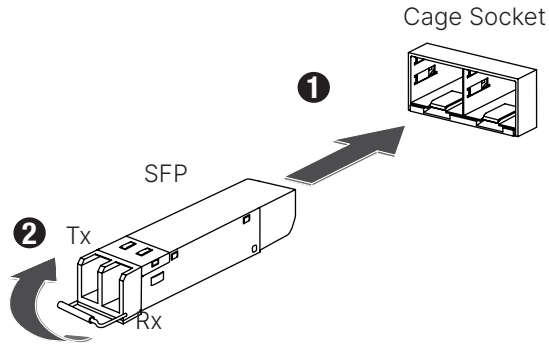

Removal

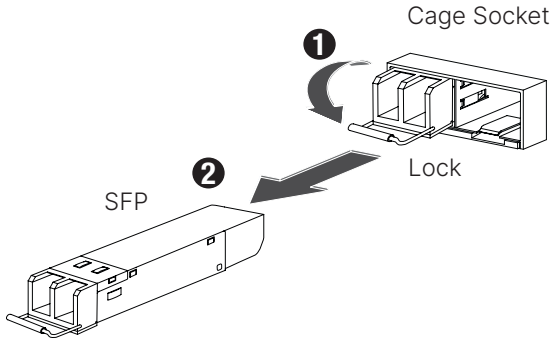

Desktop Installation

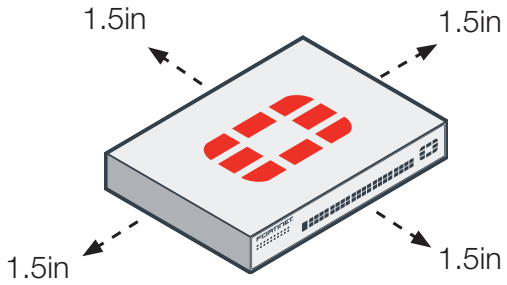

Note: Place the device on a flat, clean, and stable surface.

Rack Installation

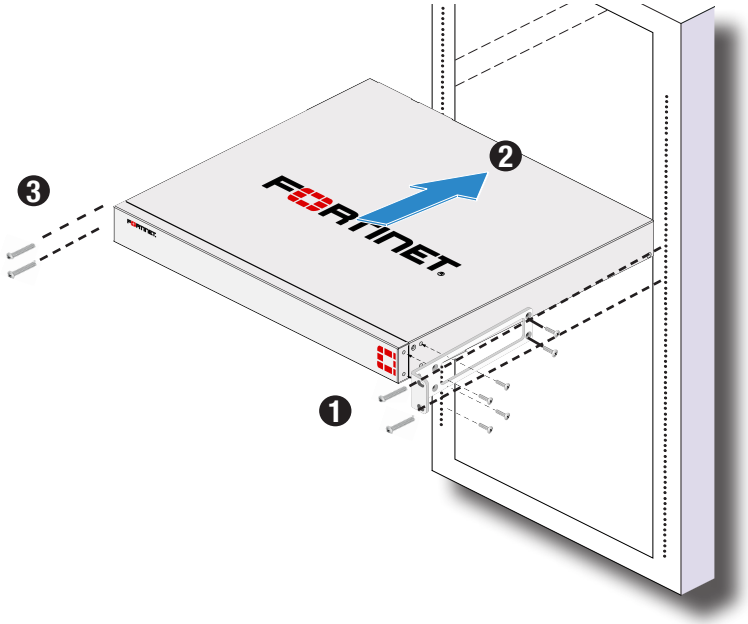

Note: The recommended clearance is 1.5 inches above and below the device in a 19 inch rack.

Caution: To avoid personal injury or damage to the device, it is recommended that two or more people mount the device on a rack.

Rack Installation

The supplied equipment is designed for standard 19 inch racks. The rails provided are specially designed for this model.

Rack Stability

Ensure the rack is stable before installing the slide rails and appliance.

- Check that the leveling jacks on the bottom of the rack are fully extended to the floor with the full weight of the rack resting on the jacks
- For single rack installation, stabilizers should be attached to the rack; for multiple rack installations, the racks should be coupled together

Appliance Installation

- To avoid personal injury or equipment damage, use a lifting device
- Do not pick up the appliance by the front handles
- Each inner rail has a system lock out tab to prevent the appliance from sliding out; ensure that it is locked when installing the appliance
- Prevent Electrostatic discharge (ESD) damage by wearing antistatic protection
- Do not place heavy objects on the appliance

What You Will Need

- Philips screwdriver, level, and tape measure
- Rack-provided cage nuts and screws
- A lifting device or additional support
- ESD antistatic gear

Support

For video support on installing these slide rails, please visit:

https://video.fortinet.com

For additional support, please visit:

https://support.fortinet.com

Rail Assembly

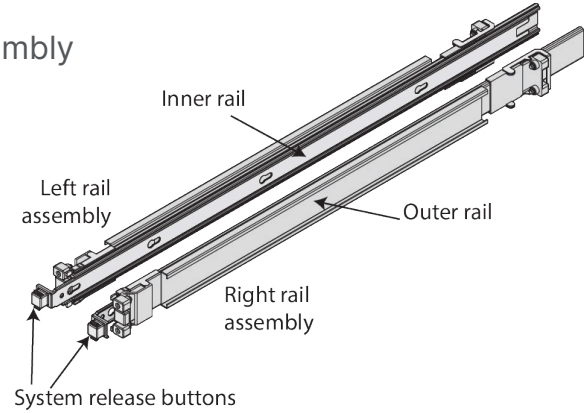

- The rail kit includes a left and a right rail assembly
- Each rail assembly includes an inner rail, a middle rail, and an outer rail
- The inner rail has locking keyholes used to secure the rail to the appliance
- The inner rail rear end has a lock out tab which slides into the middle rail
- The middle rail is in the outer rail and used to guide the inner rail into the outer rail
- The outer rail has front and rear mounting pins that push into to the rack holes
- The outer rail also has front and rear locking latches to secure the rail to the rack

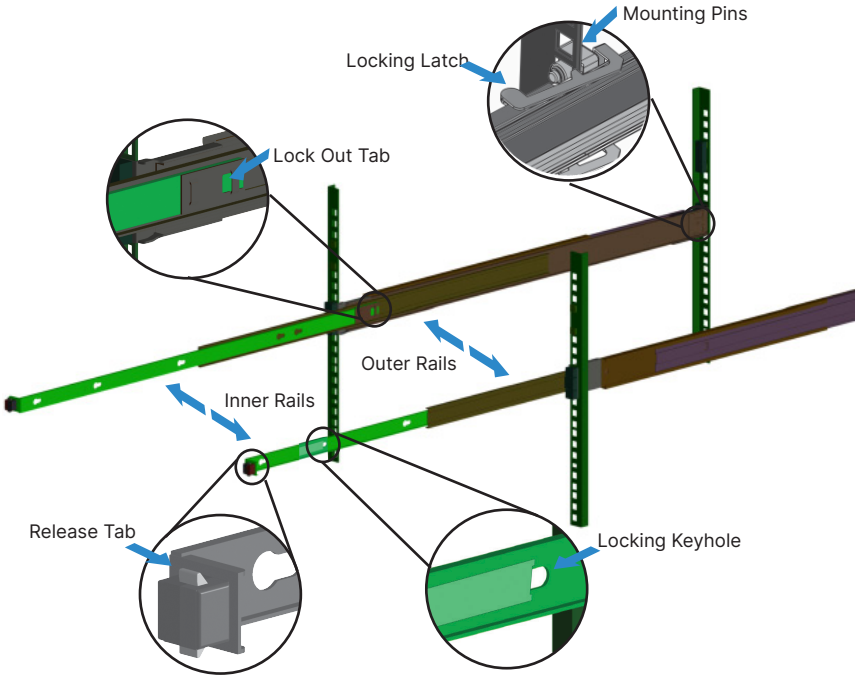

Attach the Inner Rails to the Appliance

1. Detach the inner rail from the rail assembly by pressing the lock out tab
2. Place an inner rail against a side of the appliance
3. Align the inner rail keyholes with the appliance pins
4. Slide the rail towards the front of the appliance until the metal clip locks into place
5. For inner rails with five keyholes and a chassis with three pins and a thread hole, use the provided M4 shoulder screw to secure the rail to the appliance
6. Repeat steps 1 to 5 for the remaining inner rail

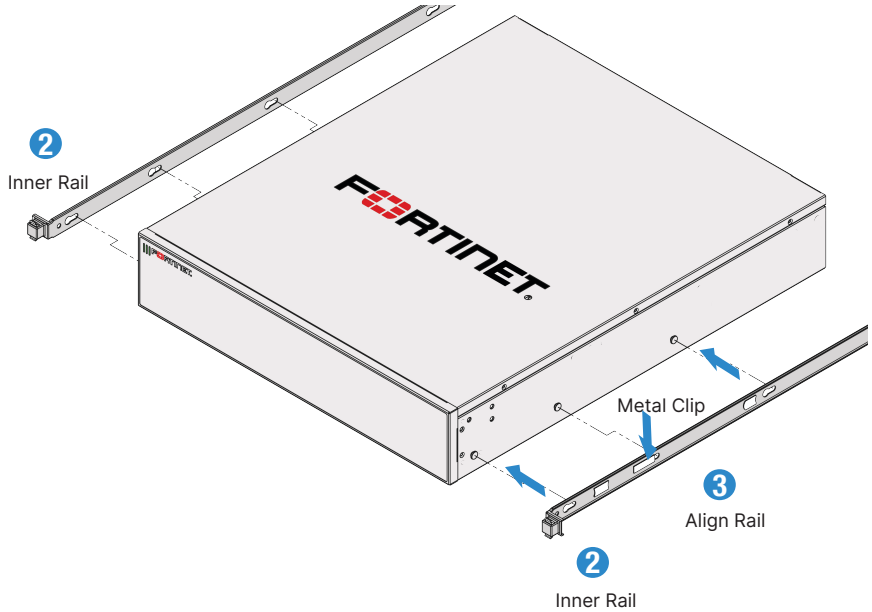

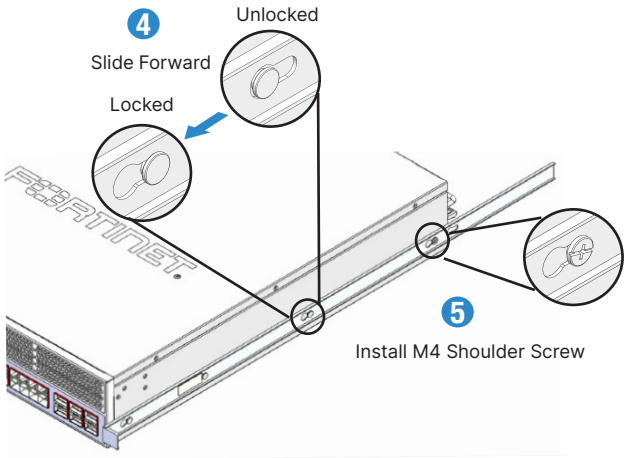

Attach the Outer Rails to the Rack

Front Outer Rail

1. Place an outer rail against a side of the rack
2. Align the front outer rail with the front of the rack
3. Push the front outer rail mounting pins into the rack post holes
4. Lock the locking latch to safely secure the front outer rail to the post

Rear Outer Rail

5. Extend the rear outer rail just past the rack post
6. Level the rail and align the mounting pins
7. Push the rear mounting pins into the rack post holes
8. Lock the locking latch to safely secure the rear outer rail to the post
9. Repeat steps 1 to 8 for the remaining outer rail

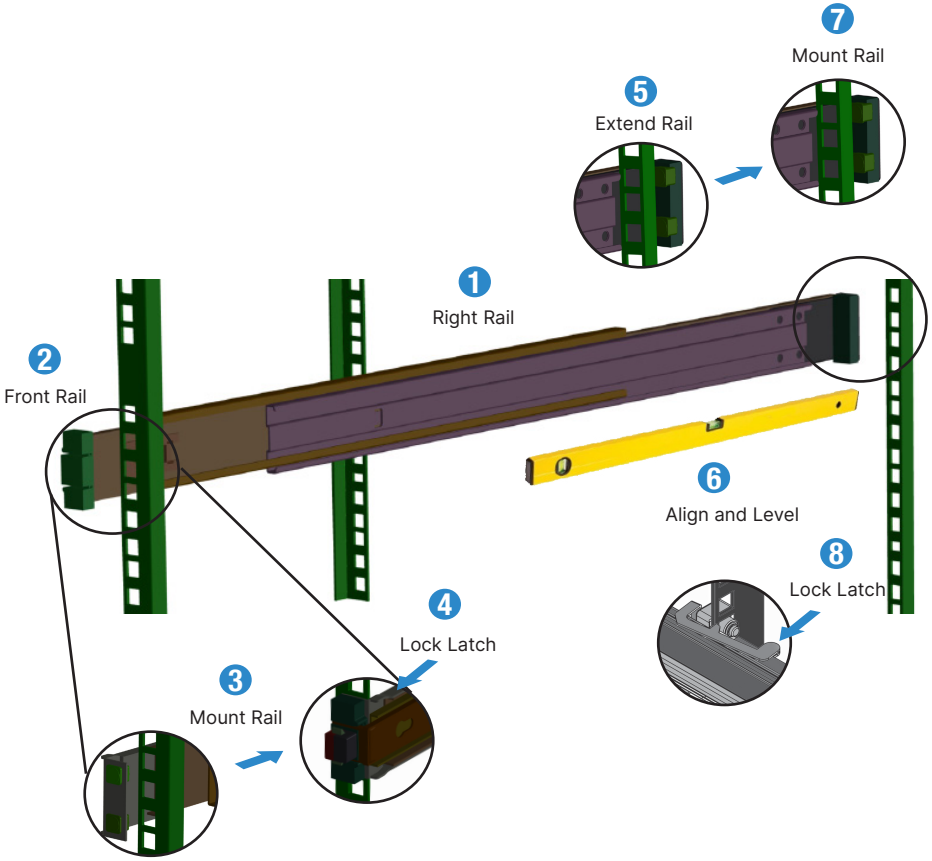

FG-3800G Series Front Panel

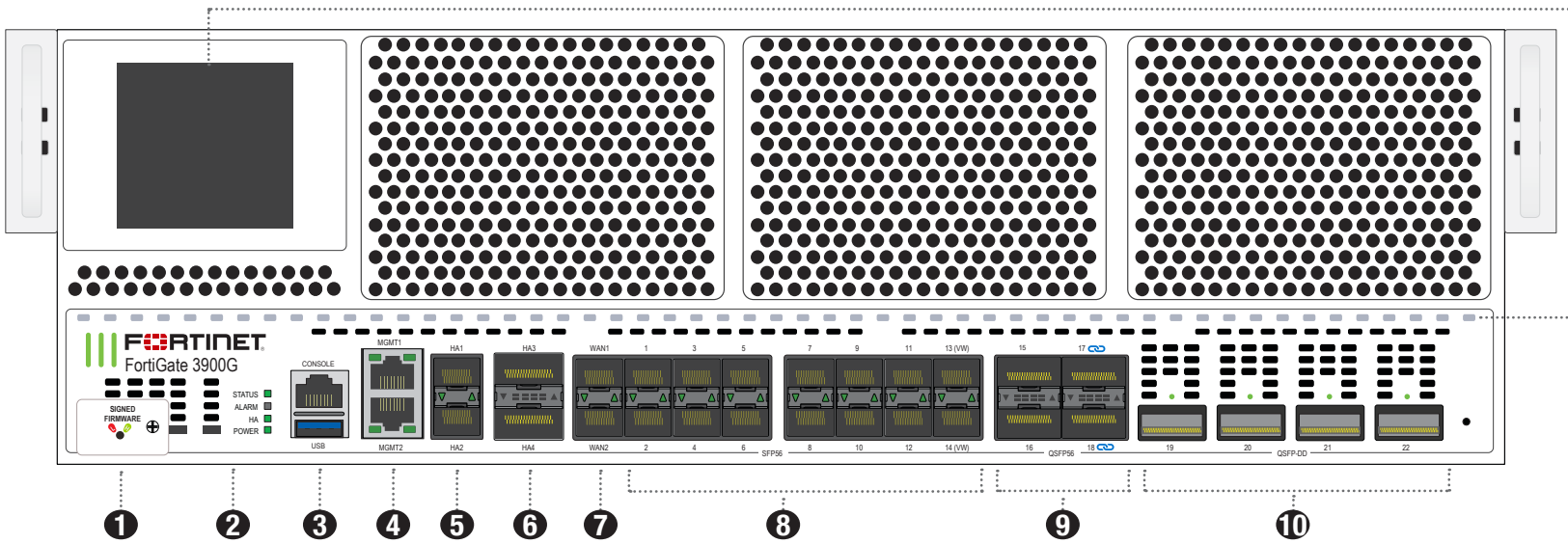

11 LCD Display

Provides immediate system performance metrics including CPU, memory, and session information. Refer to the System Administration Guide online for details.

12 ARGB LEDs

Green flashing indicates normal performance metrics. Refer to the System Administration Guide online for details.

1 Signed Firmware BIOS Security Level
Controlled by Signed Firmware Switch, see Admin Guide at https://docs.fortinet.com

- **High:** Unsigned firmware blocked (default)
- **Low:** Unsigned firmware allowed with a warning

2 STATUS

- **Green**: Normal operation
- **Flashing Green**: Booting up
- **Red**: Major Alarm
- **Off**: Device is off

HA

- **Green**: Operating in an HA cluster
- **Red**: HA failure
- **Off**: HA disabled

ALARM

- **Red**: Major alarm detected
- **Amber**: Minor alarm detected
- **Off**: No errors detected

POWER

- **Green**: Device is on
- **Off**: Device is off

3 Console (RJ45) CLI interface

USB (USB A) USB 3.0 server port

4 MGMT 1 and MGMT 2 (RJ45) 10 GE management ports

LINK/ACT (Left LED)

- **Green**: Link established
- **Flashing Green**: Data activity
- **Off**: No link established

SPEED (Right LED)

- **Green**: 10 Gbps
- **Amber**: 5/2.5/1 Gbps
- **Off**: Not in use

5 Ports HA1 and HA2 (SFP56)

- **Green**: 50/25/10 Gbps
- **Flashing Green**: Data activity
- **Off**: No link established

6 Ports HA3 and HA4 (QSFP56)

- **Green**: 200/100/40 Gbps
- **Flashing Green**: Data activity
- **Off**: No link established

7 WAN1 and WAN2 (SFP56)
DHCP/ZTP

- **Green**: 50/25/10 Gbps
- **Flashing Green**: Data activity
- **Off**: No link established

8 Ports 1 to 14 (SFP56)

- **Green**: 50/25/10 Gbps
- **Flashing Green**: Data activity
- **Off**: No link established

9 Ports 15 to 18 (QSFP56)

- **Green**: 200/100/40 Gbps
- **Flashing Green**: Data activity
- **Off**: No link established

10 Ports 19 to 22 (QSFP-DD)

- **Green**: 400/200/100/40 Gbps
- **Flashing Green**: Data activity
- **Off**: No link established

FG-3800G Series Rear Panel AC Model

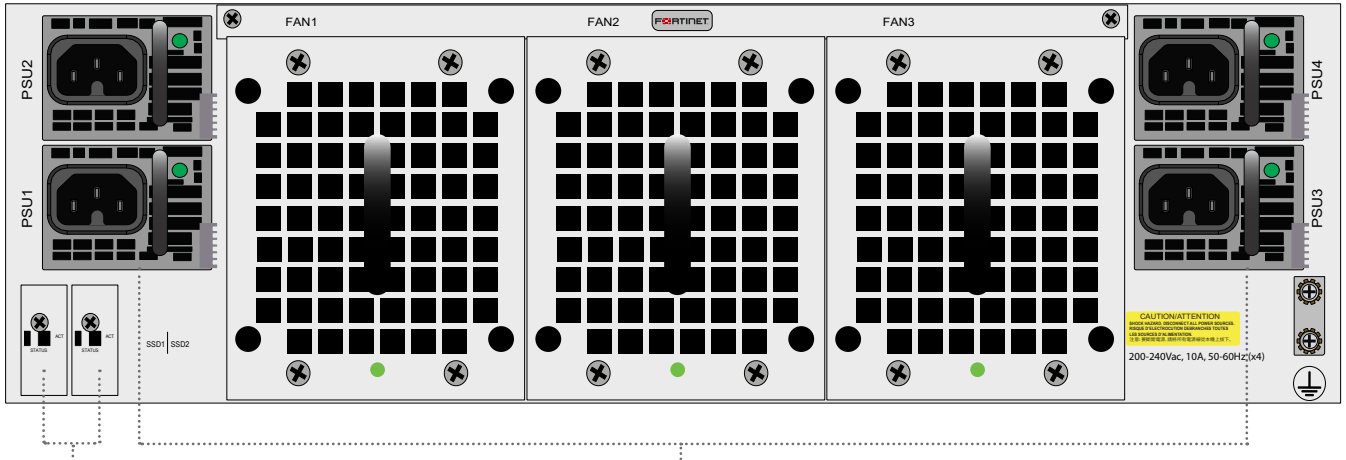

SSD Log Disks
FG-3801G model shown
FG-3800G model has covers over SSD

1 Power Supplies
200-240Vac, 10A, 50-60Hz (x4)
2+2 Redundant,
Hot-swappable power supplies

Power Supply LED Indicators

OK
- Green: Standby rail and main output on
- Flashing Green: Standby rail and main output off
- Off: Error or no AC power input

FAIL
- Amber: Main output or fan error detected
- Flashing Amber: Warning event detected
- Off: No errors or no power

FG-3800G Series Rear Panel DC Model

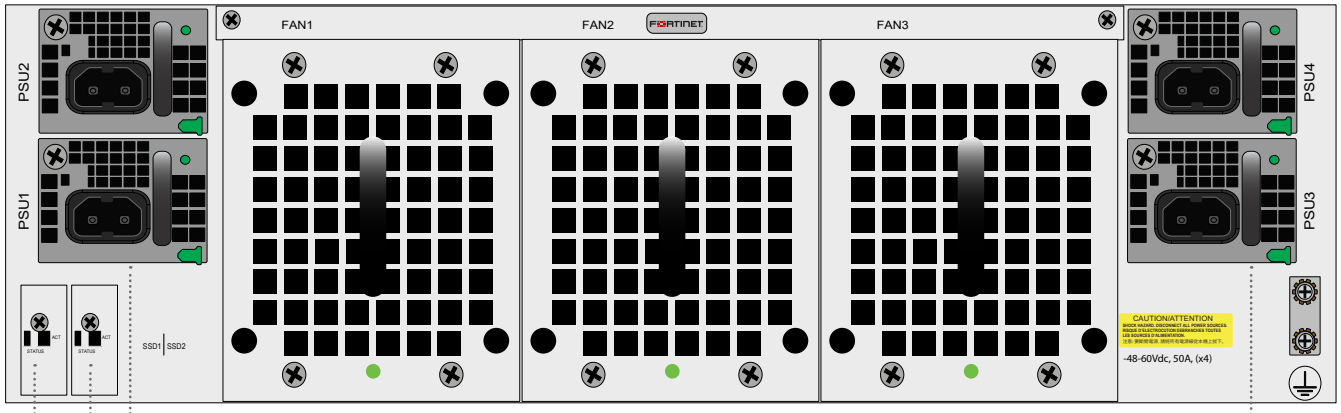

SSD Log Disks
FG-3801G-DC model shown
FG-3800G-DC model has covers over SSD

1 Power Supplies
-48V to -60Vdc, 50A max (x4)

Power Supply LED Indicators

OK
- Green: Standby rail and main output on
- Flashing Green: Standby rail and main output off
- Off: Error or no AC power input

FAIL
- Amber: Main output or fan error detected
- Flashing Amber: Warning event detected
- Off: No errors or no power

Cautions and Warnings

Environmental specifications

Ambient operating temperature: 0°C to 40°C

Rack Mount Instructions - The following or similar rack-mount instructions are included with the installation instructions:

Instructions de montage en rack - Les instructions de montage en rack suivantes ou similaires sont incluses avec les instructions d'installation:

Elevated Operating Ambient - If installed in a closed or multi-unit rack assembly, the operating ambient temperature of the rack environment may be greater than room ambient. Therefore, consideration should be given to installing the equipment in an environment compatible with the maximum ambient temperature (Tma) specified by the manufacturer.
Température ambiante élevée – S'il est installé dans un rack fermé ou à unités multiples, la température ambiante de fonctionnement de l'environnement du rack peut être supérieure à la température ambiante de la pièce. Par conséquent, il est important d'installer le matériel dans un environnement respectant la température ambiante maximale (Tma) stipulée par le fabricant.

Reduced Air Flow - Installation of the equipment in a rack should be such that the amount of air flow required for safe operation of the equipment is not compromised.
Ventilation réduite – Installation de l'équipement dans un rack doit être telle que la quantité de flux d'air nécessaire au bon fonctionnement de l'équipement n'est pas compromise.

Mechanical Loading - Mounting of the equipment in the rack should be such that a hazardous condition is not achieved due to uneven mechanical loading.
Chargement Mécanique – Montage de l'équipement dans le rack doit être telle qu'une situation dangereuse n'est pas lié à un chargement mécanique inégal.

Circuit Overloading - Consideration should be given to the connection of the equipment to the supply circuit and the effect that overloading of the circuits might have on overcurrent protection and supply wiring. Appropriate consideration of equipment nameplate ratings should be used when addressing this concern.
Surtension – Il convient de prendre l'ensemble des précautions nécessaires lors du branchement de l'équipement au circuit d'alimentation et être particulièrement attentif aux effets de la suralimentation sur le dispositif assurant une protection contre les courts-circuits et le câblage. Ainsi, il est recommandé de tenir compte du numéro d'identification de l'équipement.

Reliable Earthing - Reliable earthing of rack-mounted equipment should be maintained. Particular attention should be given to supply connections other than direct connections to the branch circuit (e.g. use of power strips).
Fiabilité de la mise à la terre – Fiabilité de la mise à la terre de l'équipement monté en rack doit être maintenue. Une attention particulière devrait être accordée aux connexions d'alimentation autres que les connexions directes au circuit de dérivation (par exemple de l'utilisation de bandes de puissance).

Blade Carriers, Cards and Modems must be Listed Accessories or Switch, Processor, Carrier and similar blades or cards should be UL Listed or Equivalent.

Serveur-blades, cartes et modems doivent être des accessoires listés ou commutateurs, processeurs, serveurs et similaire blades ou cartes doivent être listé UL ou équivalent.

Refer to specific Product Model Data Sheet for Environmental Specifications (Operating Temperature, Storage Temperature, Humidity, and Altitude)

Référez à la Fiche Technique de ce produit pour les caractéristiques environnementales (Température de fonctionnement, température de stockage, humidité et l'altitude).

Safety

Moving parts — Hazardous moving parts. Keep away from moving fan blades.
Pièces mobiles – Pièces mobiles dangereuses. Se tenir éloigné des lames mobiles du ventilateur.

Warning: Equipment intended for installation in Restricted Access Location.
Avertissement: Le matériel est conçu pour être installé dans un endroit où l'accès est restreint.

Skilled person must install the equipment.
L'équipement doit être installé par une personne qualifiée

Warning: A readily accessible disconnect device shall be incorporated in the building installation wiring.
Avertissement: Un dispositif de déconnexion facilement accessible doit être incorporé dans l'installation électrique du bâtiment.

Battery – Risk of explosion if the battery is replaced by an incorrect type. Do not dispose of batteries in a fire. They may explode. Dispose of used batteries according to your local regulations. IMPORTANT: Switzerland: Annex 4.10 of SR814.013 applies to batteries.

Batterie – Risque d'explosion si la batterie est remplacée par un type incorrect. Ne jetez pas les batteries au feu. Ils peuvent exploser. Jetez les piles usagées conformément aux réglementations locales. IMPORTANT: Suisse: l'annexe 4.10 de SR814.013 s'appliquent aux batteries.

警告
本電池如果更換不正確會有爆炸的危險
請依製造商說明書處理用過之電池

CAUTION: Shock Hazard. Disconnect all power sources.
ATTENTION: Risque d'électrocution. Débranchez toutes les sources d'alimentation.

Caution: Slide/rail mounted equipment is not to be used as a shelf or a work space.
Attention: Un équipement monté sur bâti ne doit pas être utilisé sur une étagère ou dans un espace de travail.

Fiber optic transceiver must be rated 3.3V, 22mA max, Laser Class 1, UL certified component.
Le transceiver optique doit avoir les valeurs nominales de 3.3 V, maximum 22 mA, Laser Class 1, homologué UL

Regulatory Notices

Federal Communication Commission (FCC) – USA

This device complies with Part 15 of the FCC Rules. Operation is subject to the following two conditions:
(1) this device may not cause harmful interference, and
(2) this device must accept any interference received; including interference that may cause undesired operation.

This equipment has been tested and found to comply with the limits for a Class A digital device, pursuant to Part 15 of the FCC Rules. These limits are designed to provide reasonable protection against harmful interference when the equipment is operated in a commercial environment. This equipment generates, uses, and can radiate radio frequency energy, and if it is not installed and used in accordance with the instruction manual, it may cause harmful interference to radio communications. Operation of this equipment in a residential area is likely to cause harmful interference, in which case the user will be required to correct the interference at his own expense.

WARNING: Any changes or modifications to this product not expressly approved by the party responsible for compliance could void the user's authority to operate the equipment

Innovation, Science and Economic Development (ISED) – Canada

CAN ICES (A) / NMB (A)

This digital apparatus does not exceed the Class A limits for radio noise emissions from digital apparatus set out in the Radio Interference Regulations of the Canadian Department of Communications.

Cet appareil numérique n'émet pas de bruits radioélectriques dépassant les limites applicables aux appareils numériques de la classe A prescrites dans le Règlement sur le brouillage radioélectrique édicte par le ministère des Communications du Canada.

European Conformity (CE) - EU

This is a Class A product. In a domestic environment, this product may cause radio interference, in which case the user may be required to take adequate measures.

CE

Voluntary Control Council for Interference (VCCI) – Japan

この装置は、クラスA機器です。この装置を住宅環境で使用すると電波妨害を引き起こすことがあります。この場合には使用者が適切な対策を講ずるよう要求されることがあります。
VCCI－A

Product Safety Electrical Appliance & Material (PSE) – Japan

日本では電気用品安全法(PSE)の規定により、同梱している電源コードは本製品の専用電源コードとして利用し、他の製品に使用しないでください。

Bureau of Standards Metrology and Inspection (BSMI) – Taiwan

限用物質含有情況表 (RoHS Table) 請到以下 網址下載：
https://www.fortinet.com/bsmi

警告： 為避免電磁干擾，本產品不應安裝或使用於住宅環境。

請仔細閱讀以下說明
本設備勿置於潮濕處。
連接至電源前，請先檢查電壓。
當設備不用時，請將所有電源線拔除，避免電壓不穩而造成傷害。
勿將任何液體濺入設備中，避免線路短路。
基於安全理由，只有受到專業訓練的從業人員，才可以打開本設備。
請勿自行調整或修理已通電的設備，以確保您的安全。
如不小心受傷，請立刻找急救人員給予您適當的救護，千萬別因傷勢輕微而忽略自己的傷勢。

請依照台灣法規處置電池。
若不正確替換電池可能導致爆炸危險，替換電池時，請使用設備生產商推薦使用的電池。
請勿拆卸、刺穿或以其他方式損壞電池。

雷射設備非用戶維修設備，請與生產商聯繫維修事宜。

注意：要斷開電源，請將所有電源線從本機上拔下

滑軌警語：
延伸滑軌至進行安裝位置前，請閱讀安裝指示。
勿在安裝位置上放置任何負載於滑軌安裝設備上。
勿將滑軌安裝設備留置於進行安裝時之位置。

英屬蓋曼群島商防特網股份有限公司台灣分公司
地址：台北市內湖區行愛路176號2樓
電話：(02) 27961666

Agência Nacional de Telecomunicações (ANATEL) – Brazil

Este produto não é apropriado para uso em ambientes domésticos, pois poderá causar interferências eletromagnéticas que obrigam o usuário a tomar medidas necessárias para minimizar estas interferências.

Fortinet.com