QuickStart Guide

FortiGate 4800F Series

FG-4800F, FG-4801F, FG-4800F-DC, FG-4801F-DC, FG-4801F-NEBS, and FG-4801F-DC-NEBS

This guide covers: FG-4800F, FG-4801F, FG-4800F-DC, FG-4801F-DC, FG-4801F-NEBS, FG-4801F-DC-NEBS

June 23, 2026

Copyright© 2026 Fortinet, Inc. All rights reserved. Fortinet®, FortiGate®, FortiCare® and FortiGuard®, and certain other marks are registered trademarks of Fortinet, Inc., in the U.S. and other jurisdictions, and other Fortinet names herein may also be registered and/or common law trademarks of Fortinet. All other product or company names may be trademarks of their respective owners. Performance and other metrics contained herein were attained in internal lab tests under ideal conditions, and actual performance and other results may vary. Network variables, different network environments and other conditions may affect performance results. Nothing herein represents any binding commitment by Fortinet, and Fortinet disclaims all warranties, whether express or implied, except to the extent Fortinet enters a binding written contract, signed by Fortinet's SVP Legal and above, with a purchaser that expressly warrants that the identified product will perform according to certain expressly-identified performance metrics and, in such event, only the specific performance metrics expressly identified in such binding written contract shall be binding on Fortinet. For absolute clarity, any such warranty will be limited to performance in the same ideal conditions as in Fortinet's internal lab tests. In no event does Fortinet make any commitment related to future deliverables, features or development, and circumstances may change such that any forward-looking statements herein are not accurate. Fortinet disclaims in full any covenants, representations, and guarantees pursuant hereto, whether express or implied. Fortinet reserves the right to change, modify, transfer, or otherwise revise this publication without notice, and the most current version of the publication shall be applicable.

For Product License Agreement / EULA and Warranty Terms, visit https://www.fortinet.com/content/dam/fortinet/assets/legal/EULA.pdf

Before you begin

Register your device to access FortiGuard updates, cloud management, firmware upgrades, technical support and warranty coverage.

https://support.fortinet.com

The Essentials

Default Logins

https://192.168.1.99
Username: ***admin***
Password**: leave blank**

MGMT1 IP 192.168.1.99
MGMT2 IP 192.168.2.99

Admin Guide

For a detailed Getting Started guide, setup and configuration information, refer to the Admin Guide on https://docs.fortinet.com/

Customer Service

For contracts, licensing, product registration and account management, contact FortiCare Support at https://www.fortinet.com/support/contact

Self-service Resources

Access our knowledge base, forums, videos and technical experts at https://www.fortinet.com/support/support-services/forticare-support

Quick Start Guide Online

Please refer to the online version for the most current and up-to-date information about your device at https://docs.fortinet.com/document/fortigate/hardware/fortigate-4800f-quickstart-guide

You may also scan the QR code below.

Thank you for choosing Fortinet

Package Contents

FortiGate 4800F Series
FG-4800F, FG-4801F, FG-4800F-DC, FG-4801F-DC, FG-4801F-NEBS, FG-4801F-DC-NEBS

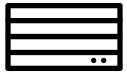
FortiGate Device

QuickStart Guide

4x SP-FGPCORC15-C14

1x Ethernet Cable

1x Console Cable

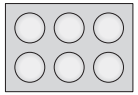
6x Rubber Feet

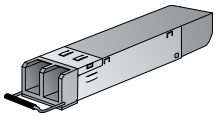
2x SFP+ Transceivers

1x Rail Kit

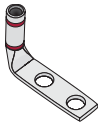
1x Grounding Lug
(DC models only)

4x DC Power Cables
(DC models only)

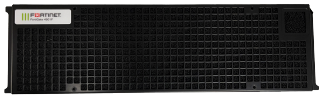
1x Pre-Installed NEBS Filter
(NEBS models only)

Setup

Unpack the box, power the device and choose one of the following options:

GUI

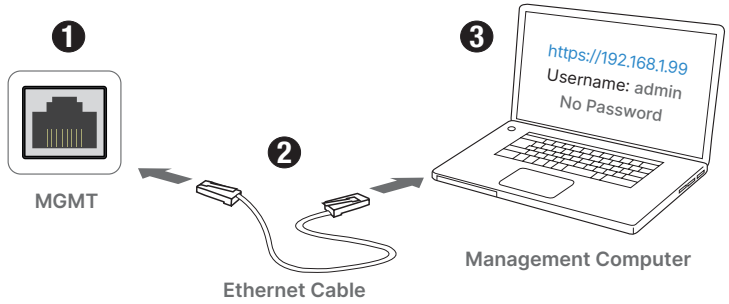

Note: Configure the management computer with IP 192.168.1.x and subnet 255.255.255.0

* Refer to the FAQ for help with the registration process: https://docs.fortinet.com/document/fortigate/hardware/registration-before-device-configuration-faq

CLI

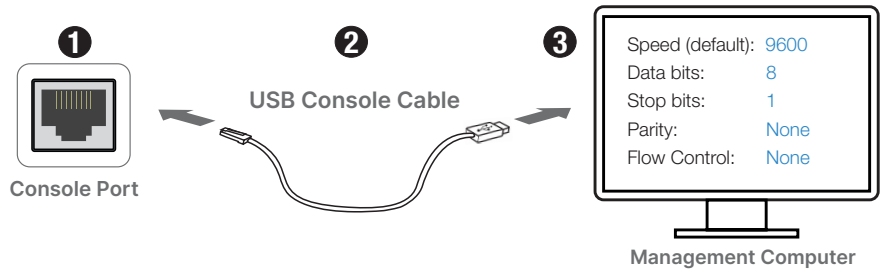

Note: For a detailed CLI guide, visit https://docs.fortinet.com

SFP Modules

Installation

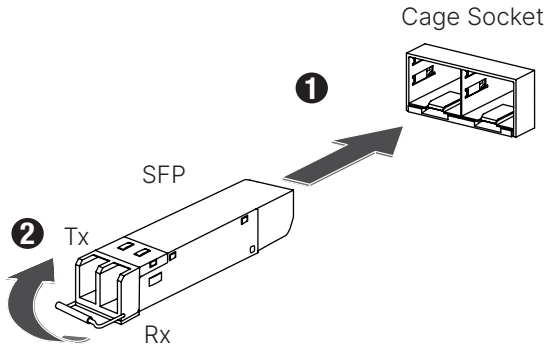

Removal

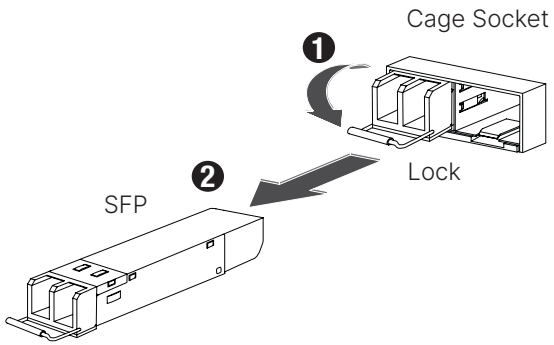

Desktop Installation

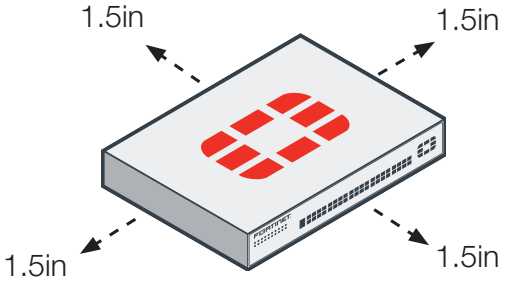

Note: Place the device on a flat, clean and stable surface.

NEBS Installation

To meet Network Equipment Building System (NEBS) and safety compliance requirements, the grounding point on the back of the device must be permanently connected to the central office or interior equipment grounding system. Use the following parts to ensure a satisfactory ground connection to the FG-4801F/-DC/-NEBS device:

- One UL Listed grounding lug with two M5 bolt holes with 15.88mm (0.625in) spacing between them
- A wire receptacle that accepts 6 AWG or larger, multistrand copper wire
- One grounding wire that is at least 6 AWG multistrand copper wire. The wire diameter and length depend on the device location and site environment
- Two screws with lock washers (provided).

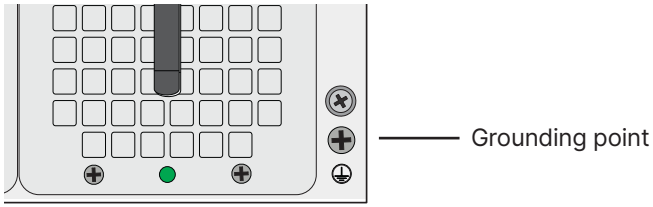

Rail Installation

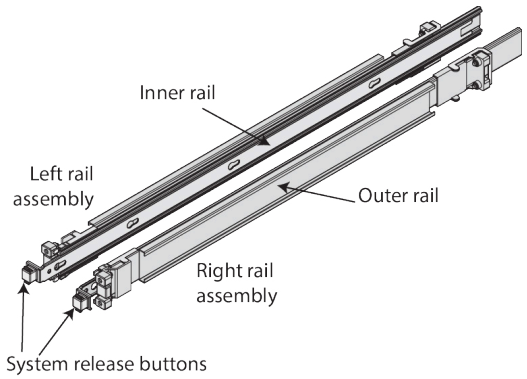

- The rail kit includes a left and a right rail assembly
- Each rail assembly includes an inner rail, a middle rail, and an outer rail
- The inner rail has locking keyholes used to secure the rail to the appliance
- The inner rail rear end has a lock out tab which slides into the middle rail
- The middle rail is in the outer rail and used to guide the inner rail into the outer rail
- The outer rail has front and rear mounting pins that push into to the rack holes
- The outer rail also has front and rear locking latches to secure the rail to the rack

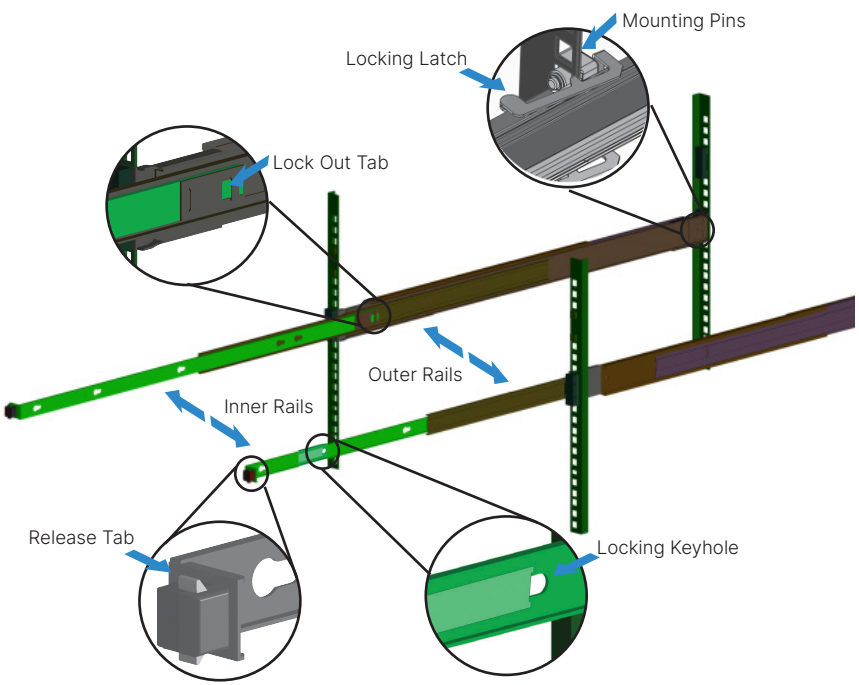

Attach the Inner Rails to the Appliance

1. Detach the inner rail from the rail assembly by pressing the lock out tab
2. Place an inner rail against a side of the appliance
3. Align the inner rail keyholes with the appliance pins
4. Slide the rail towards the front of the appliance until the metal clip locks into place
5. For inner rails with five keyholes and a chassis with three pins and a thread hole, use the provided M4 shoulder screw to secure the rail to the appliance
6. Repeat steps 1 to 5 for the remaining inner rail

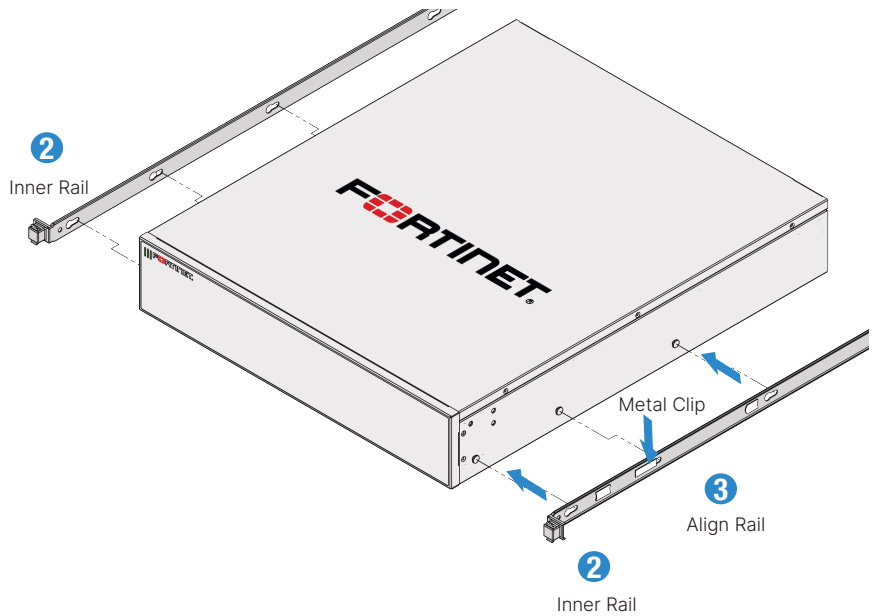

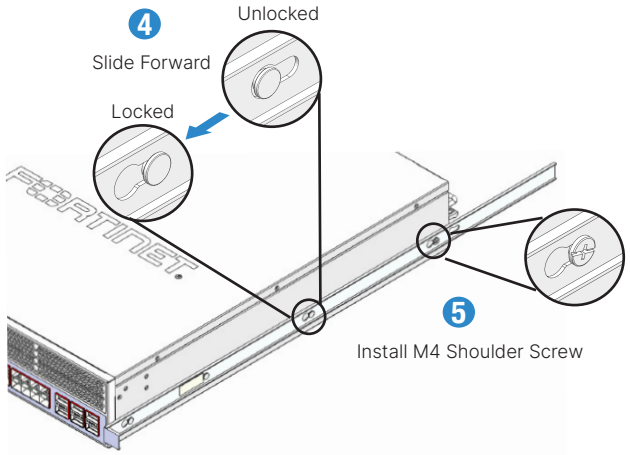

Attach the Outer Rails to the Rack

Front Outer Rail

1. Place an outer rail against a side of the rack
2. Align the front outer rail with the front of the rack
3. Push the front outer rail mounting pins into the rack post holes
4. Lock the locking latch to safely secure the front outer rail to the post

Rear Outer Rail

5. Extend the rear outer rail just past the rack post
6. Level the rail and align the mounting pins
7. Push the rear mounting pins into the rack post holes
8. Lock the locking latch to safely secure the rear outer rail to the post
9. Repeat steps 1 to 8 for the remaining outer rail

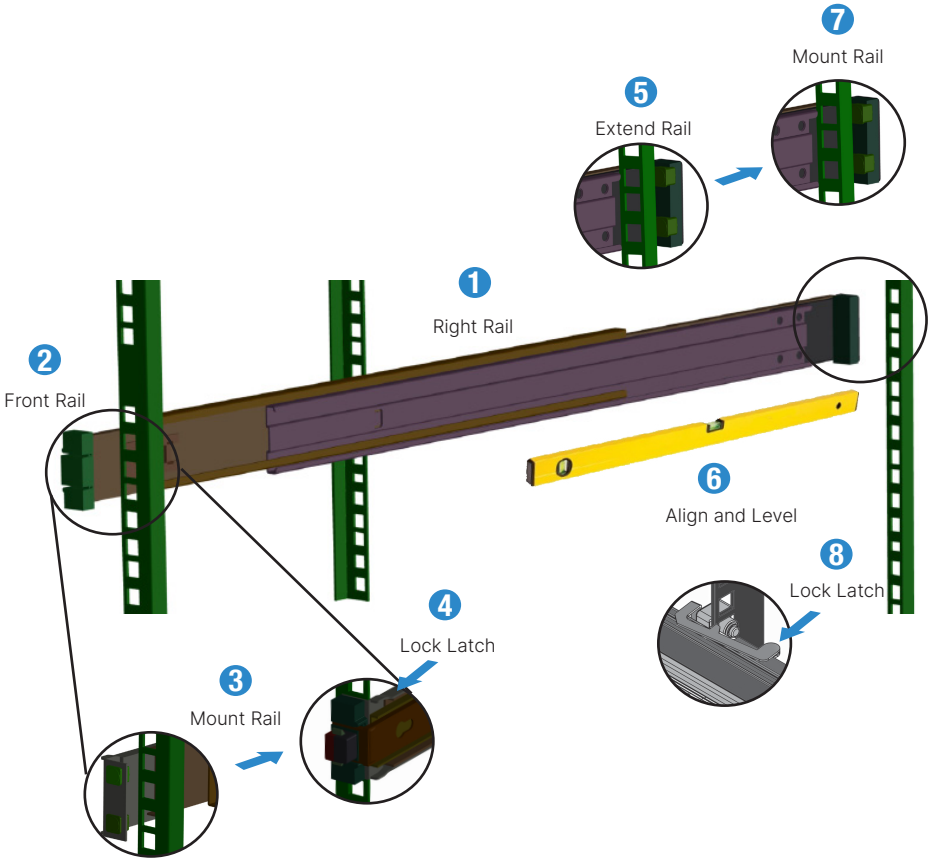

Install the Appliance

Safety Precautions

1. Check that the inner rails are secured to the appliance
2. Inspect that the rack posts and outer rails are secured and level

Rail Installation

3. Slide the middle outer rails forward until they fully extend and lock into place
4. Using a lifting device, lift the appliance and align the inner rails with the middle rails
5. Slide the appliance and inner rails into the middle rails until there is a stop

System Lock

6. Apply even pressure and slide the release tabs outward while sliding the appliance all the way into the rack until the system release tabs click and lock into position
7. Use four rack screws (not provided) to secure the appliance to the rack

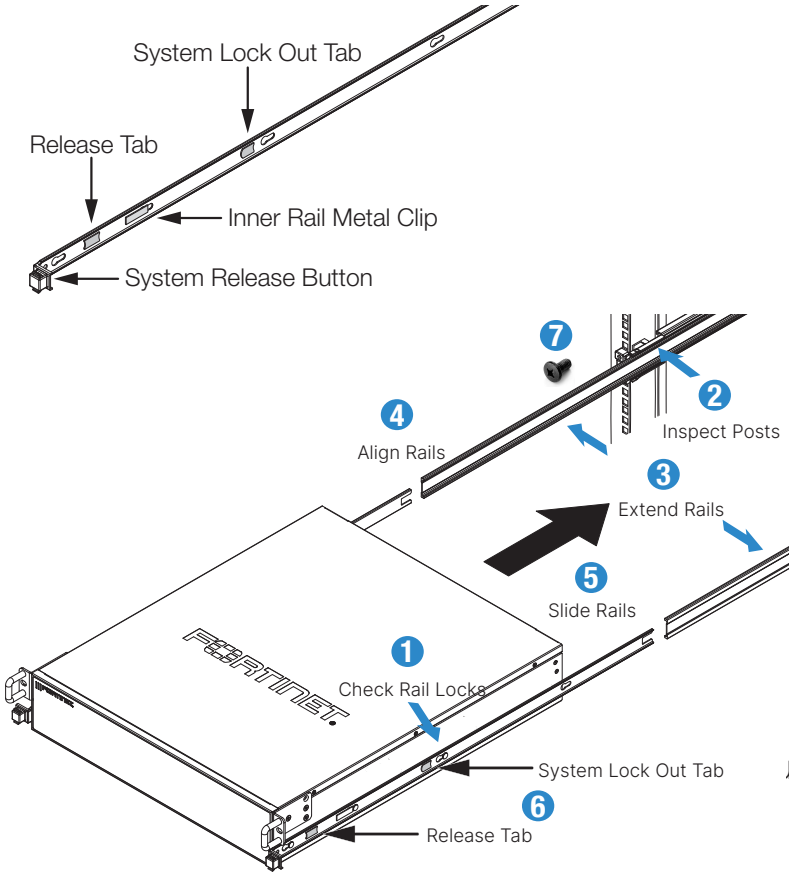

Fan Replacement

Fan modules can be hot-swapped and should be cleaned every 2 years or less. Replace fan modules after 6 years or less.

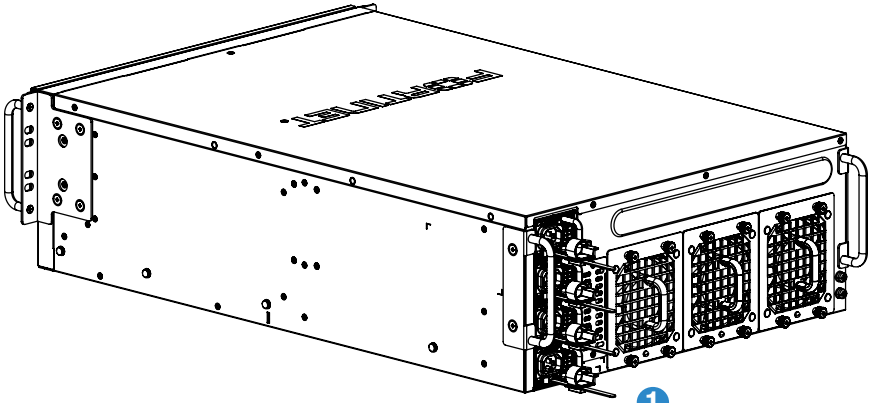

1 Unfasten 4x Fan Screws, then remove Fan Module

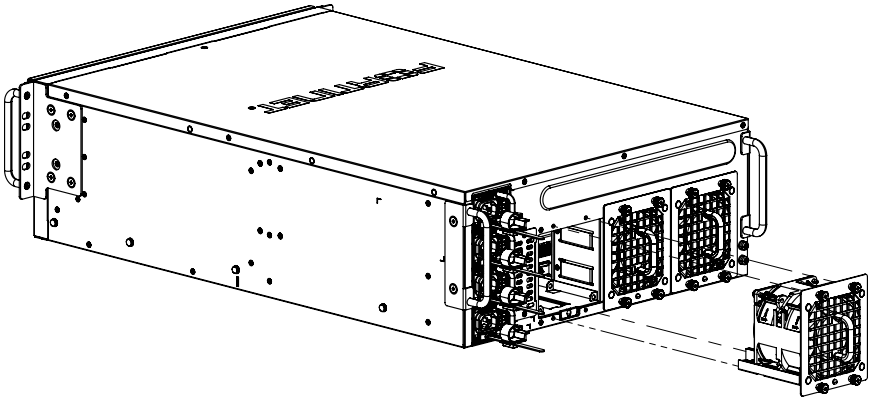

2 Replace Fan Module, then fasten 4x Fan Screws

Filter Replacement (NEBS models only)

For NEBS models, the air filter is pre-installed. Replace the filter every 6 months or less.

1 Unfasten 4x Screws, then remove Cover

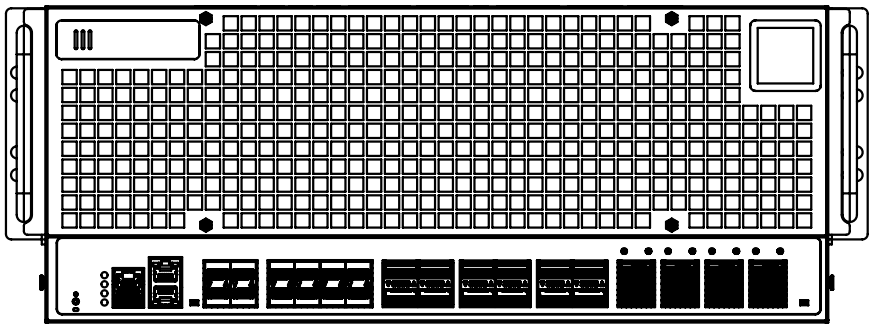

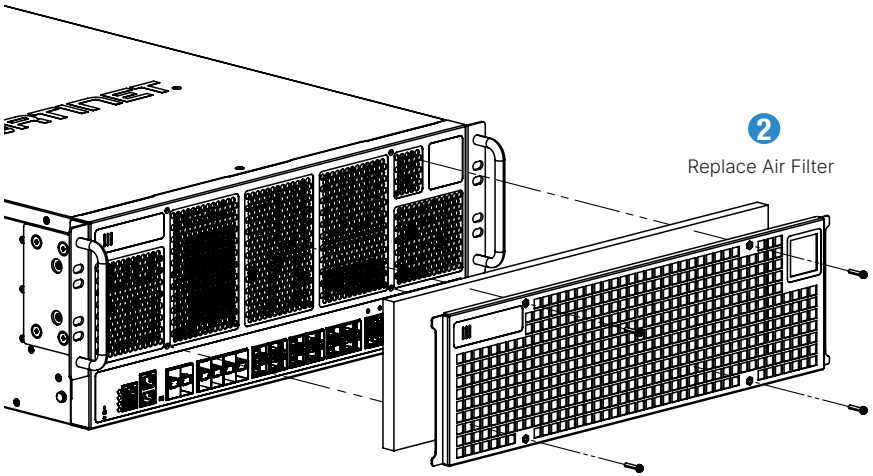

2 Replace Air Filter

3 Install Cover, then fasten 4x Screws

FG-4800F Series Front

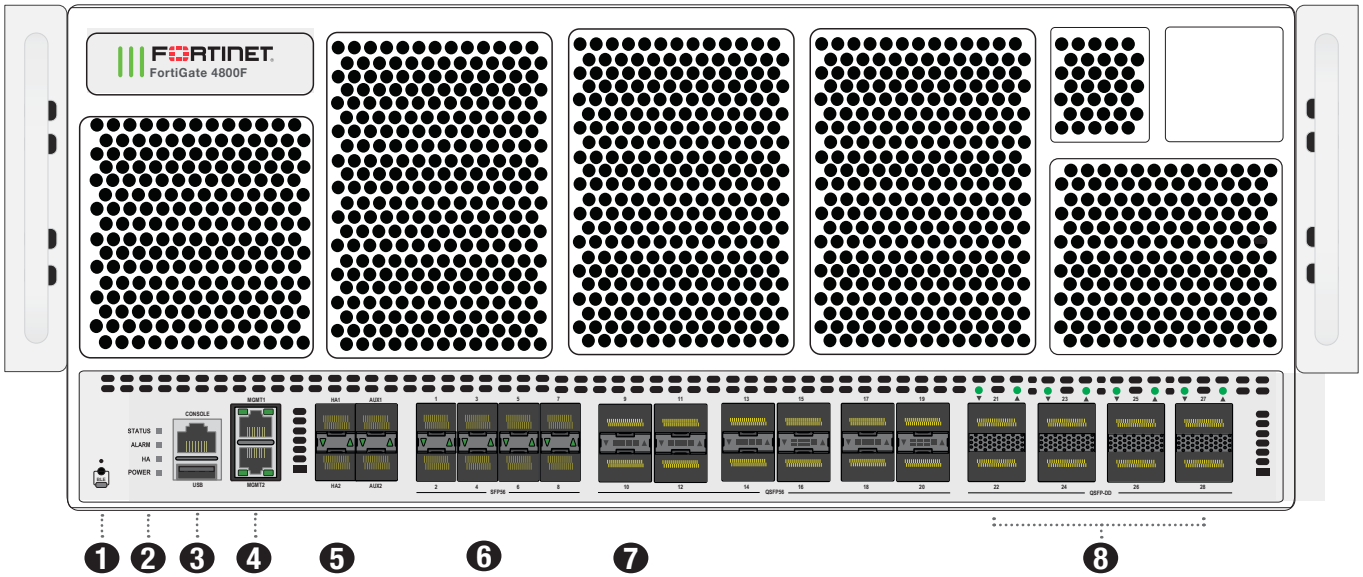

❶ **BLE Button** Activates BLE management or restores to factory default

- **Blue**: BLE connected
- **Flashing Blue**: BLE in discovery
- **Off**: BLE not connected

❷ STATUS

- **Green**: Normal operation
- **Flashing Green**: Booting up

HA

- **Green**: Operating in an HA cluster
- **Red**: HA failure
- **Off**: HA disabled

ALARM

- **Red**: Major alarm detected
- **Amber**: Minor alarm detected
- **Off**: No errors detected

POWER

- **Green**: Device is on
- **Flashing Green**: Checking PFR
- **Off**: Device is off

❸ **Console (RJ45)** CLI interface

USB (USB A) USB 3.0 server port

❹ **MGMT 1 and MGMT 2 (RJ45)** 10 GE management ports

LINK/ACT (Left LED)

- **Green**: Link established
- **Flashing Green**: Data activity
- **Off**: No link established

SPEED (Right LED)

- **Green**: 10 Gbps
- **Amber**: 1 Gbbps
- **Off**: 100 Mbps or no link established

Note: For NEBS models, the filter is pre-installed

❺ **Ports HA1, HA2, AUX1, and AUX2**

- **Green**: Connected at 50/25/10/1 Gbps
- **Flashing Green**: Data activity
- **Off**: No link established

❻ **Ports 1 to 8 (SFP56)**

- **Green**: Connected at 50/25/10/1 Gbps
- **Flashing Green**: Data activity
- **Off**: No link established

❼ **Ports 9 to 20 (QSFP56)**

- **Green**: Connected at 200/100/40 Gbps
- **Flashing Green**: Data activity
- **Off**: No link established

❽ **Ports 21 to 28 (QSFP-DD)**

- **Green**: Connected at 400/200/100/40 Gbps
- **Flashing Green**: Data activity
- **Off**: No link established

FG-4800F Series Rear

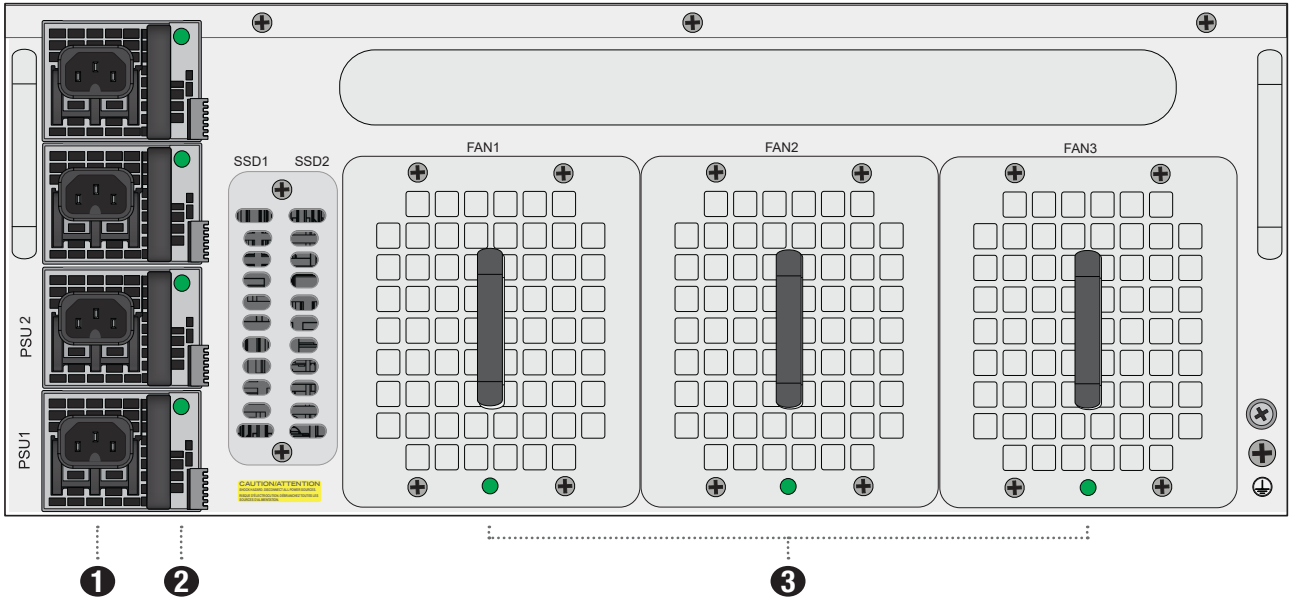

1 AC Power Supplies

200-240VAC, 7-6A, 50/60Hz (x4)
2+2 Redundant, hot-swappable power supplies

2 Power Supply LED Indicators

- **Green**: Standby rail and main output on
- **Flashing Green**: Standby rail and main output off
- **Amber**: Main output or fan error detected
- **Flashing Amber**: Power supply warning event detected
- **Off**: Error or no AC input

3 System Fan LED Status

- **Green**: Fan operating normally
- **Red**: Fan error, RPM too low or too high
- **Off**: Fan error or fan is off

Note: The fan trays are hot-swappable

FG-4800F-DC Series Rear

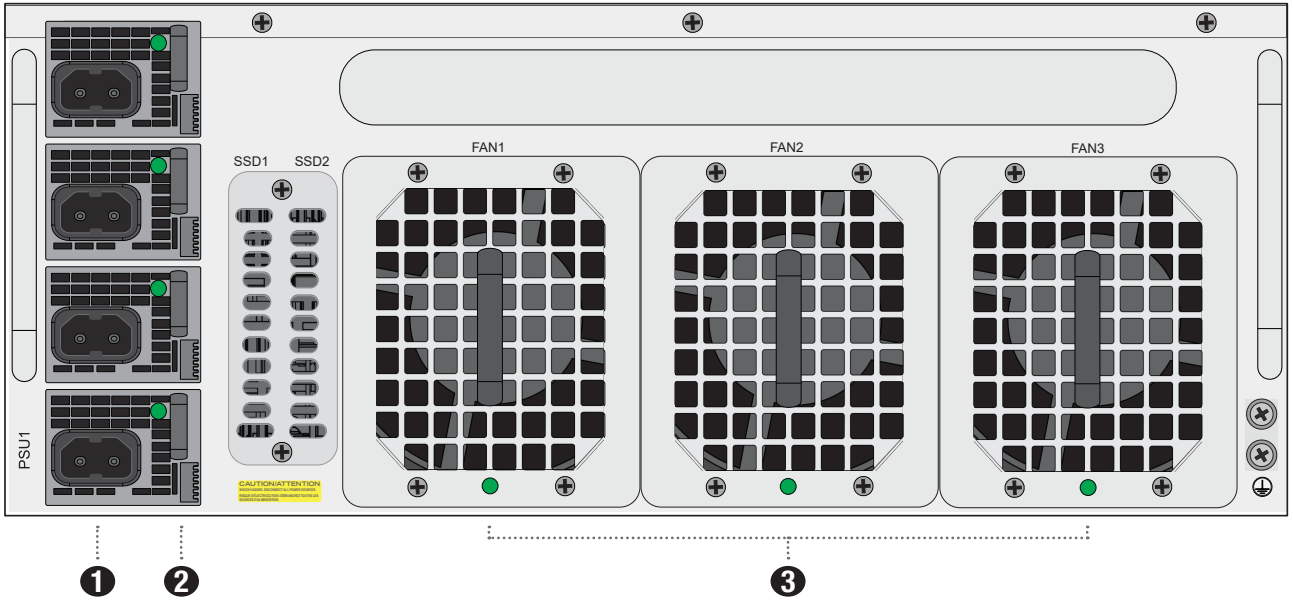

1 **DC Power Supplies (2+2)**
-48V to -60V DC, 30A-24A (x4), hot-swappable

2 **DC PSU LED Status**

- **Green**: Power supply operating normally
- **Flashing Green**: DC power detected
- **Amber**: Power output is off
- **Flashing Amber**: Power supply error
- **Off**: DC power not detected

3 **System Fan LED Status**

- **Green**: Fan operating normally
- **Red**: Fan error, RPM too low or too high
- **Off**: Fan error or fan is off

Note: The fan trays are hot-swappable

Cautions and Warnings

Environmental specifications
Ambient operating temperature: 0°C to 40°C

Rack Mount Instructions - The following or similar rack-mount instructions are included with the installation instructions:
Instructions de montage en rack - Les instructions de montage en rack suivantes ou similaires sont incluses avec les instructions d'installation:

Elevated Operating Ambient - If installed in a closed or multi-unit rack assembly, the operating ambient temperature of the rack environment may be greater than room ambient. Therefore, consideration should be given to installing the equipment in an environment compatible with the maximum ambient temperature (Tma) specified by the manufacturer.
Température ambiante élevée – S'il est installé dans un rack fermé ou à unités multiples, la température ambiante de fonctionnement de l'environnement du rack peut être supérieure à la température ambiante de la pièce. Par conséquent, il est important d'installer le matériel dans un environnement respectant la température ambiante maximale (Tma) stipulée par le fabricant.

Reduced Air Flow - Installation of the equipment in a rack should be such that the amount of air flow required for safe operation of the equipment is not compromised.
Ventilation réduite – Installation de l'équipement dans un rack doit être telle que la quantité de flux d'air nécessaire au bon fonctionnement de l'équipement n'est pas compromise.

Mechanical Loading - Mounting of the equipment in the rack should be such that a hazardous condition is not achieved due to uneven mechanical loading.
Chargement Mécanique – Montage de l'équipement dans le rack doit être telle qu'une situation dangereuse n'est pas lié à un chargement mécanique inégal.

Circuit Overloading - Consideration should be given to the connection of the equipment to the supply circuit and the effect that overloading of the circuits might have on overcurrent protection and supply wiring. Appropriate consideration of equipment nameplate ratings should be used when addressing this concern.
Surtension – Il convient de prendre l'ensemble des précautions nécessaires lors du branchement de l'équipement au circuit d'alimentation et être particulièrement attentif aux effets de la suralimentation sur le dispositif assurant une protection contre les courts-circuits et le câblage. Ainsi, il est recommandé de tenir compte du numéro d'identification de l'équipement.

Reliable Earthing - Reliable earthing of rack-mounted equipment should be maintained. Particular attention should be given to supply connections other than direct connections to the branch circuit (e.g. use of power strips).
Fiabilité de la mise à la terre – Fiabilité de la mise à la terre de l'équipement monté en rack doit être maintenue. Une attention particulière devrait être accordée aux connexions d'alimentation autres que les connexions directes au circuit de dérivation (par exemple de l'utilisation de bandes de puissance).

Refer to specific Product Model Data Sheet for Environmental Specifications (Operating Temperature, Storage Temperature, Humidity, and Altitude)

Référez à la Fiche Technique de ce produit pour les caractéristiques environnementales (Température de fonctionnement, température de stockage, humidité et l'altitude).

Safety

Moving parts — Hazardous moving parts. Keep away from moving fan blades.
Pièces mobiles – Pièces mobiles dangereuses. Se tenir éloigné des lames mobiles du ventilateur.

Warning: Equipment intended for installation in Restricted Access Location.
Avertissement: Le matériel est conçu pour être installé dans un endroit où l'accès est restreint.

Skilled person must install the equipment.
L'équipement doit être installé par une personne qualifiée.

Warning: A readily accessible disconnect device shall be incorporated in the building installation wiring.
Avertissement: Un dispositif de déconnexion facilement accessible doit être incorporé dans l'installation électrique du bâtiment.

Warning: A UL Listed external disconnect device, i.e. circuit breaker or other, with over current protection suitable for local code(rated 6A recommended) shall be installed with this equipment.
Avertissement: Un dispositif de déconnection externe homologué UL, exemple d'un disjoncteur ou autre, avec des protections de surintensité appropriées (nominal 6A recommandé) à l'installation de ce matériel.

Battery – Risk of explosion if the battery is replaced by an incorrect type. Do not dispose of batteries in a fire. They may explode. Dispose of used batteries according to your local regulations. IMPORTANT: Switzerland: Annex 4.10 of SR814.013 applies to batteries.

Batterie – Risque d'explosion si la batterie est remplacée par un type incorrect. Ne jetez pas les batteries au feu. Ils peuvent exploser. Jetez les piles usagées conformément aux réglementations locales. IMPORTANT: Suisse: l'annexe 4.10 de SR814.013 s'appliquent aux batteries.

警告
本電池如果更換不正確會有爆炸的危險
請依製造商說明書處理用過之電池

CAUTION: Shock Hazard. Disconnect all power sources.
ATTENTION: Risque d'électrocution. Débranchez toutes les sources d'alimentation.

Grounding — To prevent damage to your equipment, connections that enter from outside the building should pass through a lightning / surge protector, and be properly grounded. Use an electrostatic discharge workstation (ESD) and/or wear an anti-static wrist strap while you work. In addition to the grounding terminal of the plug, on the back panel, there is another, separate terminal for earthing.

Mise à la terre — Pour éviter d'endommager votre matériel, assurez-vous que les branchements qui entrent à partir de l'extérieur du bâtiment passent par un parafoudre / parasurtenseur et sont correctement mis à la terre. Utilisez un poste de travail de décharge électrostatique (ESD) et / ou portez un bracelet anti-statique lorsque vous travaillez. Ce produit possède une borne de mise à la terre qui est prévu à l'arrière du produit, à ceci s'ajoute la mise à la terre de la prise.

This product has a separate protective earthing terminal provided on the back of the product in addition to the grounding terminal of the attachment plug. This separate protective earthing terminal must be permanently connected to earth with a green with yellow stripe conductor minimum size # 6 AWG and the connection is to be installed by a qualified service personnel.
Ce produit a une borne de mise à la terre séparé sur le dos de l'appareil, en plus de la borne de mise à la terre de la fiche de raccordement. Cette borne de mise à la terre séparée doit être connecté en permanence à la terre avec un conducteur vert avec la taille bande jaune de minimum # 6 AWG et la connexion doit être installé par un personnel qualifié.

Caution: Slide/rail mounted equipment is not to be used as a shelf or a work space.

Attention: Un équipement monté sur bâti ne doit pas être utilisé sur une étagère ou dans un espace de travail.

Warning: Stability hazard.
Attention: Risque de stabilité.

The rack may tip over causing serious personal injury.
Le rack peut basculer et provoquer des blessures graves.

Before extending the rack to the installation position, read the installation instructions.
Avant d'étendre le rack jusqu'à la position d'installation, lisez les instructions d'installation.

Do not put any load on the slide-rail mounted equipment in the installation position.
N'exercez aucune charge sur l'équipement monté sur rail coulissant en position d'installation.

Do not leave the slide-rail mounted equipment in the installation position.
Ne laissez pas l'équipement monté sur rail en position d'installation.

Fiber optic transceiver must be rated 3.3V, 22mA max, Laser Class 1, UL certified component.
Le transceiver optique doit avoir les valeurs nominales de 3.3 V, maximum 22 mA, Laser Class 1, homologué UL

Warning: Class I Equipment. This equipment must be earthed. The power plug must be connected to a properly wired earth ground socket outlet. An improperly wired socket outlet could place hazardous voltage on accessible metal parts.
Avertissement: Équipement de classe I. Cet équipement doit être mis à la terre. La fiche d'alimentation doit être connectée à une prise de terre correctement câblée. Une prise de courant mal câblée pourrait placer une tension dangereuse sur les pièces métalliques accessibles.

Warning: All Ethernet cables are designed for intra-building connection to other equipment. Do not connect these ports directly to communication wiring or other wiring that exits the building where the appliance is located.
Avertissement: Tous les câbles Ethernet sont conçus pour une connexion intra-bâtiment à d'autres équipements. Ne connectez pas ces ports directement au câblage de communication ou à tout autre câblage qui sort du bâtiment où se trouve l'appareil.

Regulatory Notices

Federal Communication Commission (FCC) – USA

This device complies with Part 15 of the FCC Rules. Operation is subject to the following two conditions:
(1) this device may not cause harmful interference, and
(2) this device must accept any interference received; including interference that may cause undesired operation.

This equipment has been tested and found to comply with the limits for a Class A digital device, pursuant to Part 15 of the FCC Rules. These limits are designed to provide reasonable protection against harmful interference when the equipment is operated in a commercial environment. This equipment generates, uses, and can radiate radio frequency energy, and if it is not installed and used in accordance with the instruction manual, it may cause harmful interference to radio communications. Operation of this equipment in a residential area is likely to cause harmful interference, in which case the user will be required to correct the interference at his own expense.

WARNING: Any changes or modifications to this product not expressly approved by the party responsible for compliance could void the user's authority to operate the equipment

This equipment complies with FCC radiation exposure limits set forth for an uncontrolled environment. This equipment should be installed and operated with minimum distance 20cm between the radiator and your body. This transmitter must not be co-located or operating in conjunction with any other antenna or transmitter.

Industry Canada Equipment Standard for Digital Equipment (ICES) – Canada

CAN ICES-003 (A) / NMB-003 (A)

This digital apparatus does not exceed the Class A limits for radio noise emissions from digital apparatus set out in the Radio Interference Regula¬tions of the Canadian Department of Communications.

Cet appareil numérique n'émet pas de bruits radioélectriques dépassant les limites applicables aux appareils numériques de la classe A prescrites dans le Règlement sur le brouillage radioélectrique édicte par le ministère des Communications du Canada.

Innovation, Science and Economic Development (ISED) – Canada

This device contains licence-exempt transmitter(s)/receiver(s) that comply with Innovation, Science and Economic Development Canada's licence-exempt RSS(s). Operation is subject to the following two conditions:
1. This device may not cause interference.
2. This device must accept any interference, including interference that may cause undesired operation of the device.

L'émetteur/récepteur exempt de licence contenu dans le présent appareil est conforme aux CNR d'Innovation, Sciences et Développement économique Canada applicables aux appareils radio exempts de licence. L'exploitation est autorisée aux deux conditions suivantes:
1. L'appareil ne doit pas produire de brouillage;
2. L'appareil doit accepter tout brouillage radioélectrique subi, même si le brouillage est susceptible d'en compromettre le fonctionnement.

This equipment complies with ISED radiation exposure limits set forth for an uncontrolled environment. This equipment should be installed and operated with minimum distance 20cm between the radiator & your body.

Cet équipement est conforme aux limites d'exposition aux rayonnements ISED établies pour un environnement non contrôlé. Cet équipement doit être installé et utilisé avec un minimum de 20cm de distance entre la source de rayonnement et votre corps.

This radio transmitter **(Contains IC:7280B-111T15E)** has been approved by ISED to operate with the antenna types listed below with the maximum permissible gain and required antenna impedance for each antenna type indicated. Antenna types not included in this list, having a gain greater than the maximum gain indicated for that type, are strictly prohibited for use with this device.

Le présent émetteur radio **(Contains IC:7280B-111T15E)** a été approuvé par ISED pour fonctionner avec les types d'antenne énumérés ci-dessous et ayant un gain admissible maximal et l'impédance requise pour chaque type d'antenne. Les types d'antenne non inclus dans cette liste, ou dont le gain est supérieur au gain maximal indiqué, sont strictement interdits pour l'exploitation de l'émetteur.

This device and it's antennas(s) must not be co-located or operating in conjunction with any other antenna or transmitter except in accordance with IC multi-transmitter product procedures.

Cet appareil et son antenne (s) ne doit pas être co-localisés ou fonctionnement en association avec une autre antenne ou transmetteur.

Ant.	Brand Holder	Model Name	Antenna Type	Connector	Antenna Gain (dBi)
1	Wieson	ARY196-0047-011-00	PIFA	MMCX	-0.27

European Conformity (CE) - EU

This is a Class A product. In a domestic environment, this product may cause radio interference, in which case the user may be required to take adequate measures.

The product transmits within the frequency ranges and less than or equal to the power listed below:

2402-2480MHz less than 20dBm

This equipment should be installed and operated with minimum distance 20cm between the radiator & your body.

Simplified EU Declaration of Conformity

This declaration is only valid for Fortinet products (including combinations of software, firmware and hardware) provided by Fortinet or Fortinet's authorized partners to the end-customer directly for use within the EU or countries that have implemented the EU Directives and/or spectrum regulation. Any Fortinet products not obtained directly from Fortinet or Fortinet's authorized partners may not comply with EU Directives and Fortinet makes no assurances for such products.

Български
Този продукт е в съответствие с Директива 2014/53/EC.

Česky
Tento produkt je v souladu se směrnicí 2014/53/EU.

Dansk
Dette produkt er i overensstemmelse med direktiv 2014/53/EU.

Deutsch
Dieses Produkt entspricht der Richtlinie 2014/53/EU.

Eesti
See toode vastab direktiivile 2014/53/EL.

English
This product is in compliance with Directive 2014/53/EU.

Español
Este producto cumple con la Directiva 2014/53/UE.

Ελληνική
Το προϊόν αυτό συμμορφώνεται με την Οδηγία 2014/53/ΕΕ.

Français
Ce produit est conforme à la Directive 2014/53/UE.

Hrvatski
Ovaj proizvod je u skladu s Direktivom 2014/53/EU.

Italiano
Questo prodotto è conforme alla Direttiva 2014/53/EU.

Latviski
Šis produkts atbilst Direktīvai 2014/53/ES.

Lietuvių
Šis gaminys atitinka direktyvą 2014/53/ES.

Malti
Dan il-prodott huwa konformi mad-Direttiva 2014/53/UE.

Magyar
Ez a termék megfelel a 2014/53/EU irányelvnek.

Nederlands
Dit product is in overeenstemming met Richtlijn 2014/53/EU.

Norsk
Dette produktet er i samsvar med direktiv 2014/53/EU.

Polski
Ten produkt jest zgodny z dyrektywą 2014/53/UE.

Português
Este produto está em conformidade com a Diretiva 2014/53/UE.

Rumunski
Acest produs este în conformitate cu Directiva 2014/53/UE.

Slovensky
Tento produkt je v súlade so smernicou 2014/53/EÚ.

Slovensko
Ta izdelek je v skladu z Direktivo 2014/53/EU.

Suomi
Tämä tuote on direktiivin 2014/53/EU mukainen.

Svenska
Denna produkt överensstämmer med direktiv 2014/53/EU.

Note: The full Declaration of Conformity for this product is available in the link below:
https://site.fortinet.com/ProductRegulatory/EU

Compliance with 2014/53/EU Radio Equipment Directive (RED)
In accordance with Article 10.8(a) and 10.8(b) of the RED, the following table provides information on the frequency bands used and the maximum e.i.r.p. of the product for sale in the EU:

Frequency Range (MHz)	Maximum e.i.r.p. (dBm)
Bluetooth 2.4GHz	1.98

UK Conformity Assessed (UKCA) – United Kingdom

The product transmits within the frequency ranges and less than or equal to the power listed below:
2402-2480MHz less than 20dBm

This equipment should be installed and operated with minimum distance 20cm between the radiator & your body.

This product is in compliance with **Statutory Instrument 1206 Radio Equipment Regulations 2017**

The full Declaration of Conformity for this product is available in the link below:
https://site.fortinet.com/ProductRegulatory/UK

Voluntary Control Council for Interference (VCCI) – Japan

この装置は、クラスＡ機器です。この装置を住宅環境で使用すると電波妨害を引き起こすことがあります。この場合には使用者が適切な対策を講ずるよう要求されることがあります。

ＶＣＣＩ－Ａ

Product Safety Electrical Appliance & Material (PSE) – Japan

日本では電気用品安全法(PSE)の規定により、同梱している電源コードは本製品の専用電源コードとして利用し、他の製品に使用しないでください。

Bureau of Standards Metrology and Inspection (BSMI) – Taiwan

The presence conditions of the restricted substance (BSMI RoHS table) are available at the link below:
限用物質含有情況表 (RoHS Table) 請到以下 網址下載:
https://www.fortinet.com/bsmi

警告： 為避免電磁干擾，本產品不應安裝或使用於住宅環境。

請仔細閱讀以下說明
本設備勿置於潮濕處。
連接至電源前，請先檢查電壓。
當設備不用時，請將所有電源線拔除，避免電壓不穩而造成傷害。
勿將任何液體濺入設備中，避免線路短路。
基於安全理由，只有受到專業訓練的從業人員，才可以打開本設備。
請勿自行調整或修理已通電的設備，以確保您的安全。
如不小心受傷，請立刻找急救人員給予您適當的救護，千萬別因傷勢輕微而忽略自己的傷勢。

請依照台灣法規處置電池。
若不正確替換電池可能導致爆炸危險，替換電池時，請使用設備生產商推薦使用的電池。
請勿拆卸、刺穿或以其他方式損壞電池。

雷射設備非用戶維修設備，請與生產商聯繫維修事宜。

注意：要斷開電源，請將所有電源線從本機上拔下

英屬蓋曼群島商防特網股份有限公司台灣分公司
地址：台北市內湖區行愛路176號2樓
電話：(02) 27961666

National Telecommunications Commission (NCC) – Taiwan

NCC警語
取得審驗證明之低功率射頻器材，非經核准，公司、商號或使 用者均不得擅自變更頻率、加大功率或變更原設計之特性及功能。低功率射頻器材之使用不得影響飛航安全及干擾合法通信；經發現有干擾現象時，應立即停用，並改善至無干擾時方得繼續使用。前述合法通信，指依電信管理法規定作業之無線電通信。低功率射頻器材須忍受合法通信或工業、科學及醫療用電波輻射性電機設備之干擾。

China

警告：在居住环境中，运行此设备可能会造成无线电干扰。

NEBS

WARNING: The intra-building ports of the FG-4801F/-DC/-NEBS equipment or subassembly are suitable for connection to intra-building or unexposed wiring or cabling only. The intra-building port(s) of the equipment or subassembly MUST NOT be metallically connected to interfaces that connect to the OSP or its wiring. These interfaces are designed for use as intra-building interfaces only (Type 2 or Type 4 ports as described in GR-1089-CORE, Issue 6) and require isolation from the exposed OSP cabling. The addition of Primary Protectors is not sufficient protection in order to connect these interfaces metallically to OSP wiring.

For AC powered EUT:
WARNING: The FG-4801F/-DC/-NEBS shall be connected to and external Special Protection Devices (SPD) when installed and connected to commercial AC power.

The FG-4801F/-DC/-NEBS shall be located in a restricted access location were only crafts personnel are allowed access.

FG-4801F/-DC/-NEBS utilizes a UL Listed two-hole with a size of 6-10AWG that utilizes 4N·m to secure the frame and EUT.

The FG-4801F/-DC/-NEBS shall be installed and connected to the CBN.

The FG-4801F/-DC/-NEBS is suitable for connection to the Central Office and locations where NEC applies.

The battery returns of the FG-4801F/-DC/-NEBS shall be connected as DC-I.

The FG-4801F/-DC/-NEBS shall be grounded via a copper ground conductor.

All bare grounding connection points to the FG-4801F/-DC/-NEBS shall be cleaned and coated with an anti-oxidant solution before connections are made.

All surfaces on the FG-4801F/-DC/-NEBS that are un-plated shall be brought to a bright finish and treated with and anti-oxidant solution before connections is made.

All non-conductive surfaces on the FG-4801F/-DC/-NEBS shall be removed from all threads and connection points to ensure electrical continuity.

The FG-4801F/-DC/-NEBS is capable of operating at 200-240Vac or -48Vdc to -60Vdc at a maximum current level 7-6A for AC or 30-24A.

Air filter must be replaced every 6 months.

Fortinet.com