QuickStart Guide

FortiGate Rugged 60G-5G

FGR-60G-5G

The Essentials

Secure your Network

Register at https://support.fortinet.com for the latest threat protection updates.

Fortinet Documents Library

For getting started documentation, admin guides, up-to-date hardware manuals and reference resources, visit https://docs.fortinet.com/

FortiGate Cloud

Experience simplified cloud provisioning, security analytics, remote access, hosted log retention and reporting at https://fortigate.forticloud.com

Quick Start Guide Online

Please refer to the online version for the most current and up-to-date information about your device at https://docs.fortinet.com/document/fortigate/hardware/fortigate-rugged-60g-5g-qsg

You may also scan the QR code below.

Package Contents

FortiGate Rugged 60G-5G

FGR-60G-5G

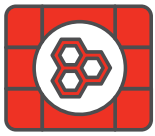

1x FGR-60G-5G

1x QuickStart Guide

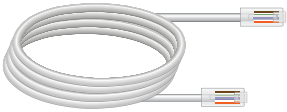

1x CAT5e Ethernet Cable

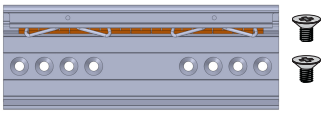

1x DIN Rail Bracket w/Screws (2x M4×8mm)

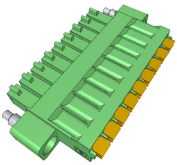

1x Digital I/O Connector

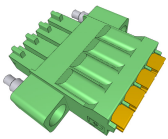

1x DC Power Connector

4x Rubber Feet

4x Antennas

Power Installation

Warnings

- The redundant DC inputs support negative ground (+12V to +125V DC) and positive ground (-12V to -125V DC), 2.5A Max.
- With the optional failover redundancy, if the primary DC input fails, the secondary DC input will supply power.
- DC1+ and DC2+ are the higher voltage potential pins and DC1- and DC2- are the lower voltage potential pins.
- Do not connect the DC+ terminal to a lower voltage potential than the DC- terminal.
- The voltage between DC+ and DC- must be +12V to +125V DC.
- The DC wire gauge maximum is 16 AWG; the minimum is 22 AWG.
- Consult a professional electrician to install the device and determine a suitable wire gauge and length.
- The DC input connector does not support hot plugging.

Connector Pinout

Connect DC1+ or DC2+ on the device terminal block to the DC power source, then connect the negative DC1- or DC2- on the terminal block.

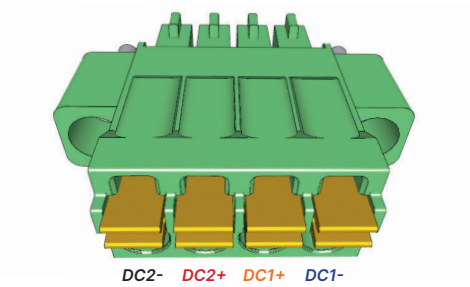

DC Input Power	DC+ Terminal	DC- Terminal
Negative Ground	+12V to +125V DC	Ground
Positive Ground	Ground	-12V to -125V DC

Wiring

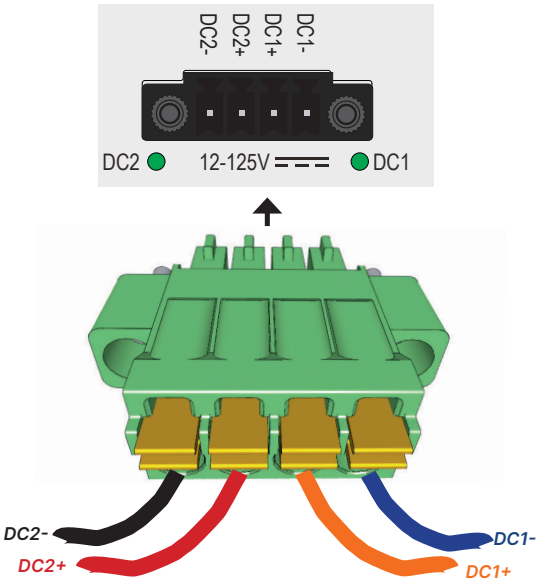

Grounding

Optional but recommended, connect earth ground using the lug plate or grounding screw.

Dimensions

NOTE: Drawings are for dimensional purposes only. Refer to the following pages for connector details.

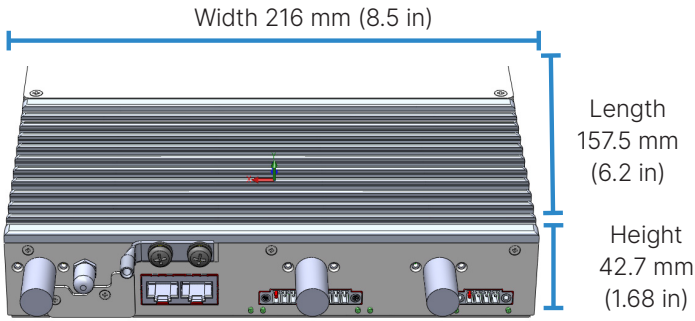

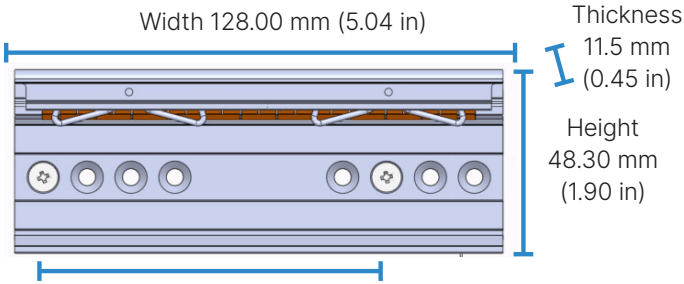

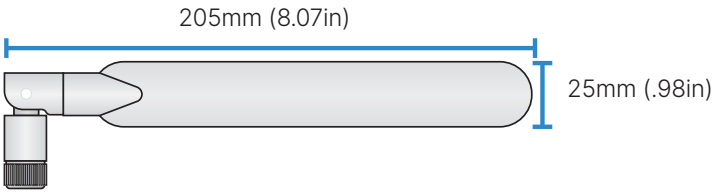

DIN Rail Mounting Bracket

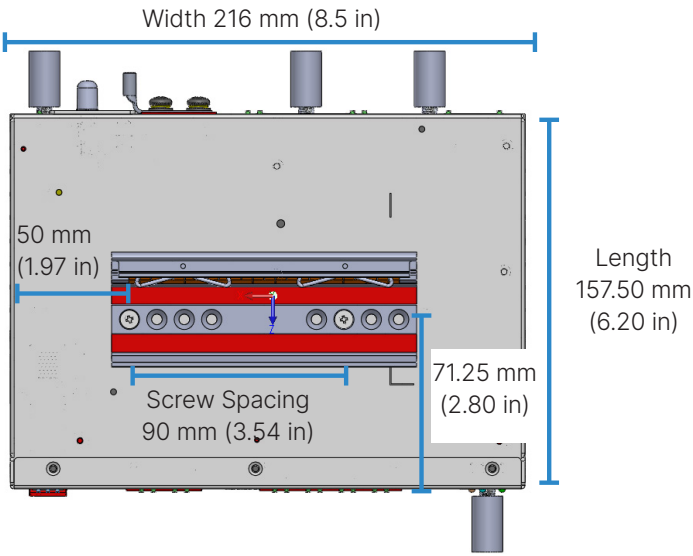

DIN bracket can also be mounted in different directions based on requirements.

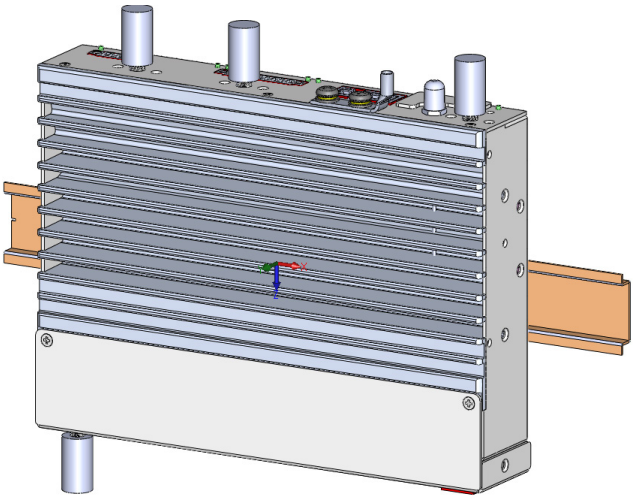

Desktop Mount

Attach the rubber feet and place the device on a flat, clean and stable surface. Make sure there is at least 38 mm (1.5 in) of clearance for adequate airflow.

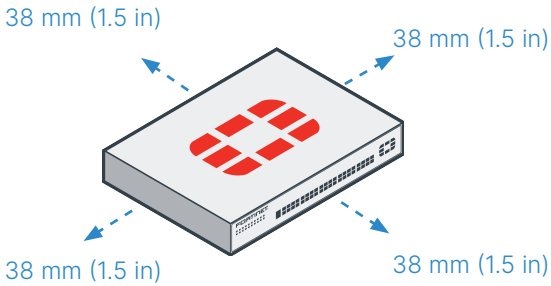

Digital I/O Connector

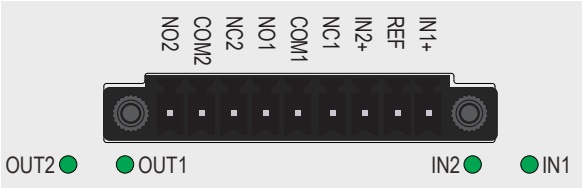

Connector	Description
NO2	Normally Open 2 Terminal
COM2	Common 2 Terminal
NC2	Normally Closed 2 Terminal
NO1	Normally Open Terminal
COM1	Common 1 Terminal
NC1	Normally Closed 1 Terminal
IN2+	Alarm Input 2
REF	Alarm Input 1/2 Reference Ground
IN1+	Alarm Input 1

Setup

FortiGate Cloud

Login to https://fortigate.forticloud.com using your Fortinet Credentials, then click **Add FortiGate** and enter the Cloudkey.

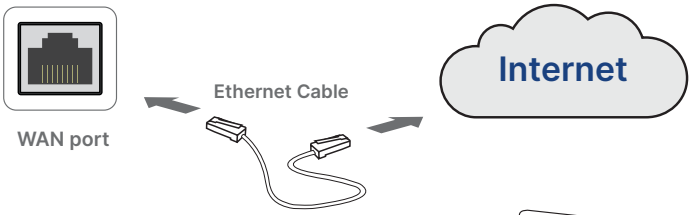

GUI

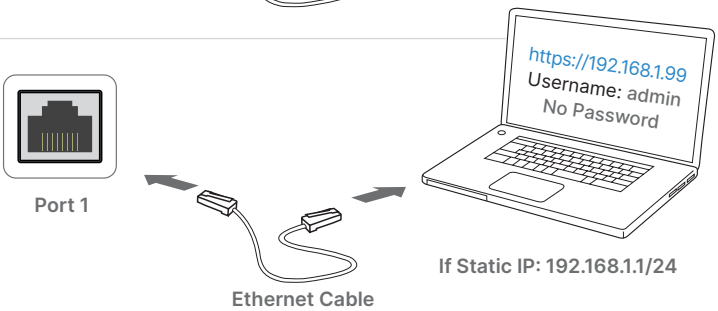

❶ Connect Port 1 to an Ethernet port using the provided Ethernet cable.
❷ Open a browser to https://192.168.1.99

CLI

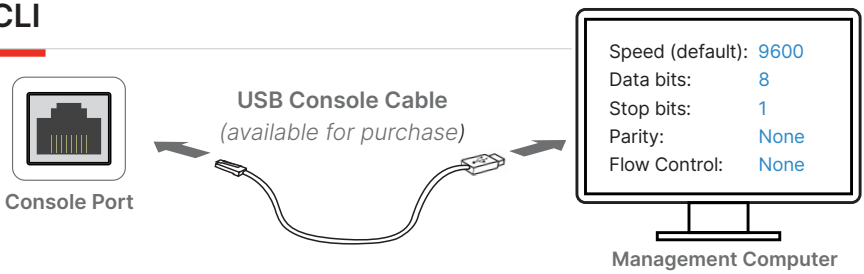

❶ Connect a console cable (available for purchase) to the Console port.
❷ Open a Terminal app using 9600-8-N-1

BIOS Options

The default CPU speed is set to high performance mode. Low power mode can be set in the BIOS options. See the Admin Guide for more information at https://docs.fortinet.com

Front FGR-60G-5G

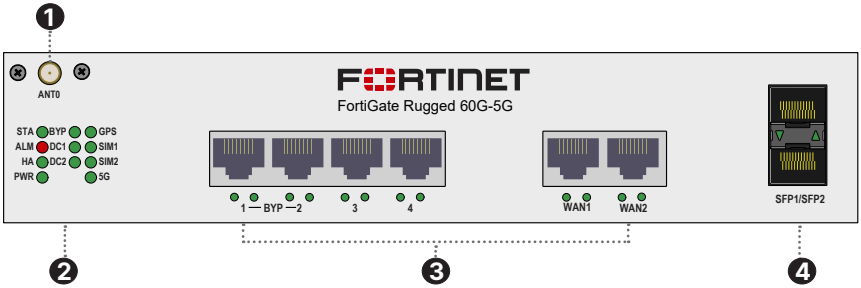

1 Antenna Connector (4x SMA)

2 SYSTEM STATUS and 5G LEDS

STA
- **Off:** Device is off
- **Green:** Operating normally
- **Flashing Green:** Reset window

ALM
- **Red:** Major alarm detected
- **Amber:** Minor alarm detected
- **Off:** No alarm detected

HA
- **Green:** HA enabled (normal)
- **Red:** HA enabled (failover)
- **Off:** HA disabled

PWR
- **Green:** Power detected
- **Off:** Power not detected

BYP

Bypass Ports 1 and 2 only; bypass disabled by default
- **Green:** Bypass off
- **Red:** Bypass on

DC1 and **DC2**
- **Green:** Power detected
- **Red:** Alarm is on, no power detected
- **Off:** No power detected

GPS
- **Green**: On
- **Off**: Off

SIM1 and **SIM2**
- **Green**: SIM slot active
- **Off**: SIM slot inactive

5G
- **Green**: 5G connected
- **Amber**: 4G/3G connected
- **Off**: Not connected

3 1GE Ports 1 to 4 WAN1 WAN2 (DHCP/ZTP) **(M12)**

Activity/Link (Left LED)
- **Green:** Link Established
- **Flashing Green:** Data activity
- **Off:** No link established

Speed (Right LED)
- **Green:** Connected at 1 Gbps
- **Amber:** Connected at 100Mbps
- **Off:** 10 Mbps or not connected

4 1GE SFP1 and SFP2 Ports (SFP)

SFP LED Link/ACT
- **Green:** Link established
- **Flashing Green:** Data activity
- **Off:** No link established

Rear FGR-60G-5G

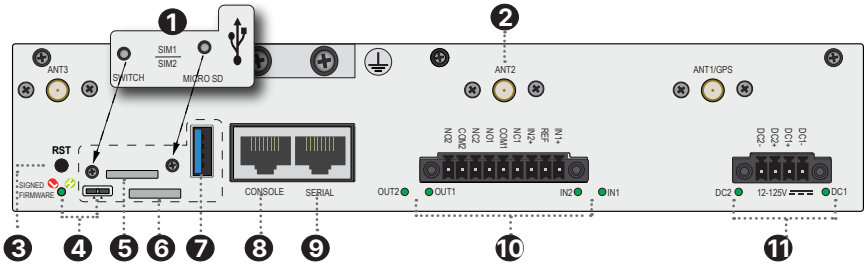

1. **Removable cover** (closed while device is operating)
2. **Antenna Connector (4x SMA)**
3. **Reset Button**
4. **Signed Firmware LED and Switch** BIOS Security Level
   See Admin Guide at https://docs.fortinet.com
   - **High**: Interim image will be blocked (default)
   - **Low**: Interim image will be allowed
5. **Dual 5G 4FF Nano SIM slot** (contains dual nano SIM tray)
   Industrial SIM cards recommended for extreme temperature environments. Refer to the FGR datasheet for supported operating temperatures. Includes eSIM support, see the 5G Modem Operators Manual at https://docs.fortinet.com.
6. **Micro SD Slot**
   Industrial Micro SD card recommended for extreme temperature environments. Hot-swapping the Micro SD card is not supported. Power off the device before installing or uninstalling the Micro SD card. Micro SD card not included. Refer to the Admin Guide for SD card details at https://docs.fortinet.com.
7. **USB 2.0 (USB-A)**
8. **Console (RJ45)** CLI Management Computer Connection
9. **Serial (RJ45)**
10. **Alarm Inputs (IN1** and **IN2)**
    - **Green:** Alarm defined
    - **Red:** Alarm detected
    - **Off:** Alarm not defined

    Alarm Outputs (OUT1 and **OUT2)**
    - **Green:** Alarm defined
    - **Flashing Red:** Major alarm detected
    - **Red:** Minor alarm detected
    - **Off:** Alarm not defined
11. **Power Connectors (DC1 and DC2)** Alarm disabled by default.
    - **Green:** Power detected
    - **Red:** Alarm is on; no power detected
    - **Off:** No power detected

Cautions and Warnings

Environmental specifications

Ambient operating temperature: -40°C to 75°C

Refer to specific Product Model Data Sheet for Environmental Specifications (Operating Temperature, Storage Temperature, Humidity, and Altitude)
Référez à la Fiche Technique de ce produit pour les caractéristiques environnementales (Température de fonctionnement, température de stockage, humidité et l'altitude).

Safety

Warning: Equipment intended for installation in Restricted Access Location.
Avertissement: Le matériel est conçu pour être installé dans un endroit où l'accès est restreint.

A skilled person must install the equipment.
L'équipement doit être installé par une personne qualifiée.

Battery – Risk of explosion if the battery is replaced by an incorrect type. Do not dispose of batteries in a fire. They may explode. Dispose of used batteries according to your local regulations. IMPORTANT: Switzerland: Annex 4.10 of SR814.013 applies to batteries.

Batterie – Risque d'explosion si la batterie est remplacée par un type incorrect. Ne jetez pas les batteries au feu. Ils peuvent exploser. Jetez les batteries usagées conformément aux réglementations locales. IMPORTANT: Suisse: l'annexe 4.10 de SR814.013 s'appliquent aux batteries.

Grounding — To prevent damage to your equipment, connections that enter from outside the building should pass through a lightning / surge protector, and be properly grounded. Use an electrostatic discharge workstation (ESD) and/or wear an anti-static wrist strap while you work. In addition to the grounding terminal of the plug, on the back panel, there is another, separate terminal for earthing.

Mise à la terre — Pour éviter d'endommager votre matériel, assurez-vous que les branchements qui entrent à partir de l'extérieur du bâtiment passent par un parafoudre / parasurtenseur et sont correctement mis à la terre. Utilisez un poste de travail de décharge électrostatique (ESD) et / ou portez un bracelet anti-statique lorsque vous travaillez. Ce produit possède une borne de mise à la terre qui est prévu à l'arrière du produit, à ceci s'ajoute la mise à la terre de la prise.

This product has a separate protective earthing terminal provided on the back of the product in addition to the grounding terminal of the attachment plug. This separate protective earthing terminal must be permanently connected to earth with a green with yellow stripe conductor minimum size # 20 AWG and the connection is to be installed by a qualified service personnel.

Ce produit a une borne de mise à la terre séparée située à l'arrière de l'appareil, en plus de la borne de mise à la terre de la fiche de raccordement. Cette borne de mise à la terre séparée doit être connectée en permanence à la terre avec un conducteur vert avec la taille bande jaune de minimum # 20 AWG et la connexion doit installée par un personnel qualifié.

Connect to NEC Class 2 power source
Connectez-vous à une source d'alimentation NEC Classe 2

Regulatory Notices

Federal Communication Commission (FCC) – USA

This device complies with Part 15 of the FCC Rules. Operation is subject to the following two conditions:
(1) this device may not cause harmful interference, and
(2) this device must accept any interference received; including interference that may cause undesired operation.

Note: This equipment has been tested and found to comply with the limits for a Class A digital device, pursuant to Part 15 of the FCC Rules. These limits are designed to provide reasonable protection against harmful interference when the equipment is operated in a commercial environment. This equipment generates, uses, and can radiate radio frequency energy, and if it is not installed and used in accordance with the instruction manual, it may cause harmful interference to radio communications. Operation of this equipment in a residential area is likely to cause harmful interference, in which case the user will be required to correct the interference at his own expense.

WARNING: Any changes or modifications to this product not expressly approved by the party responsible for compliance could void the user's authority to operate the equipment

This equipment complies with FCC radiation exposure limits set forth for an uncontrolled environment. This equipment should be installed and operated with minimum distance 20cm between the radiator and your body. This transmitter must not be co-located or operating in conjunction with any other antenna or transmitter.

Innovation, Science and Economic Development (ISED) – Canada

CAN ICES (A) / NMB (A)

This digital apparatus does not exceed the Class A limits for radio noise emissions from digital apparatus set out in the Radio Interference Regulations of the Canadian Department of Communications.

Cet appareil numérique n'émet pas de bruits radioélectriques dépassant les limites applicables aux appareils numériques de la classe A prescrites dans le Règlement sur le brouillage radioélectrique édicte par le ministère des Communications du Canada.

This device contains licence-exempt transmitter(s)/receiver(s) that comply with Innovation, Science and Economic Development Canada's licence-exempt RSS(s). Operation is subject to the following two conditions:
1. This device may not cause interference.
2. This device must accept any interference, including interference that may cause undesired operation of the device.

L'émetteur/récepteur exempt de licence contenu dans le présent appareil est conforme aux CNR d'Innovation, Sciences et Développement économique Canada applicables aux appareils radio exempts de licence. L'exploitation est soumise aux deux conditions suivantes:
1. L'appareil ne doit pas produire de brouillage;
2. L'appareil doit accepter tout brouillage radioélectrique subi, même si le brouillage est susceptible d'en compromettre le fonctionnement.

This equipment complies with ISED radiation exposure limits set forth for an uncontrolled environment. This equipment should be installed and operated with minimum distance 20cm between the radiator & your body.

Cet équipement est conforme aux limites d'exposition aux rayonnements ISED établies pour un environnement non contrôlé. Cet équipement doit être installé et utilisé avec un minimum de 20cm de distance entre la source de rayonnement et votre corps.

European Conformity (CE) - EU

This is a Class A product. In a domestic environment, this product may cause radio interference, in which case the user may be required to take adequate measures.

This equipment should be installed and operated with minimum distance 20cm between the radiator & your body.

Hereby, Fortinet, declares that this product is in compliance with the essential requirements and other relevant provisions of Directive 2014/53/EU.

Български
Този продукт е в съответствие с Директива 2014/53/ЕС.

Česky
Tento produkt je v souladu se směrnicí 2014/53/EU.

Dansk
Dette produkt er i overensstemmelse med direktiv 2014/53/EU.

Deutsch
Dieses Produkt entspricht der Richtlinie 2014/53/EU.

Eesti
See toode vastab direktiivile 2014/53/EL.

English
This product is in compliance with Directive 2014/53/EU.

Español
Este producto cumple con la Directiva 2014/53/UE.

Ελληνική
Το προϊόν αυτό συμμορφώνεται με την Οδηγία 2014/53/ΕΕ.

Français
Ce produit est conforme à la Directive 2014/53/UE.

Hrvatski
Ovaj proizvod je u skladu s Direktivom 2014/53/EU.

Italiano
Questo prodotto è conforme alla Direttiva 2014/53/EU.

Latviski
Šis produkts atbilst Direktīvai 2014/53/ES.

Lietuvių
Šis gaminys atitinka direktyvą 2014/53/ES.

Malti
Dan il-prodott huwa konformi mad-Direttiva 2014/53/UE.

Magyar
Ez a termék megfelel a 2014/53/EU irányelvnek.

Nederlands
Dit product is in overeenstemming met Richtlijn 2014/53/EU.

Norsk
Dette produktet er i samsvar med direktiv 2014/53/EU.

Polski
Ten produkt jest zgodny z dyrektywą 2014/53/UE.

Português
Este produto está em conformidade com a Diretiva 2014/53/UE.

Rumunski
Acest produs este în conformitate cu Directiva 2014/53/UE.

Slovensky
Tento produkt je v súlade so smernicou 2014/53/EÚ.

Slovensko
Ta izdelek je v skladu z Direktivo 2014/53/EU.

Suomi
Tämä tuote on direktiivin 2014/53/EU mukainen.

Svenska
Denna produkt överensstämmer med direktiv 2014/53/EU.

Compliance with 2014/53/EU Radio Equipment Directive (RED)

In accordance with Article 10.8(a) and 10.8(b) of the RED, the following table provides information on the frequency bands used and the maximum RF transmit power of the product for sale in the EU:

Standard	Frequency Range	Transmit Power
WCDMA	Band 1: 1920-1980MHz(Uplink); 2110-2170MHz(Downlink) Band 8: 880-915MHz(Uplink);925-960MHz(Downlink)	24 dBm (Conducted)
LTE	Band 1: 1920-1980MHz(Uplink); 2110-2170MHz(Downlink) Band 3: 1710-1785MHz(Uplink); 1805-1880MHz(Downlink) Band 7: 2500-2570MHz(Uplink); 2620-2690MHz(Downlink) Band 8: 880-915MHz(Uplink);925-960MHz(Downlink) Band 20: 832-862MHz(Uplink); 791-821MHz(Downlink) Band 28: 703-748MHz(Uplink); 758-803MHz(Downlink) Band 34: 2010-2025MHz Band 38: 2570-2620MHz Band 40: 2300-2400MHz Band 41: 2496-2690MHz Band 42: 3400-3600MHz Band 43: 3600-3800MHz	24 dBm (Conducted)
	Band 41: 2496-2690MHz	27 dBm (Conducted)
5G NR	n1: 1920-1980MHz(Uplink); 2110-2170MHz(Downlink) n3: 1710-1785MHz(Uplink); 1805-1880MHz(Downlink) n7: 2500-2570MHz(Uplink); 2620-2690MHz(Downlink) n8: 880-915MHz(Uplink);925-960MHz(Downlink) n20: 832-862MHz(Uplink); 791-821MHz(Downlink) n28: 703-748MHz(Uplink); 758-803MHz(Downlink) n38: 2570-2620MHz n40: 2300-2400MHz n41: 2496-2690MHz n77: 3300-4200MHz n78: 3300-3800MHz	24 dBm (Conducted)
	n41: 2496-2690MHz n77: 3300-4200MHz n78: 3300-3800MHz	29 dBm (Conducted)

www.fortinet.com

October 5, 2026

Copyright © 2026 Fortinet, Inc. All rights reserved. Fortinet®, FortiGate®, FortiCare® and FortiGuard®, and certain other marks are registered trademarks of Fortinet, Inc., and other Fortinet names herein may also be registered and/or common law trademarks of Fortinet. All other product or company names may be trademarks of their respective owners. Performance and other metrics contained herein were attained in internal lab tests under ideal conditions, and actual performance and other results may vary. Network variables, different network environments and other conditions may affect performance results. Nothing herein represents any binding commitment by Fortinet, and Fortinet disclaims all warranties, whether express or implied, except to the extent Fortinet enters a binding written contract, signed by Fortinet's SVP Legal and above, with a purchaser that expressly warrants that the identified product will perform according to certain expressly-identified performance metrics and, in such event, only the specific performance metrics expressly identified in such binding written contract shall be binding on Fortinet. For absolute clarity, any such warranty will be limited to performance in the same ideal conditions as in Fortinet's internal lab tests. Fortinet disclaims in full any covenants, representations, and guarantees pursuant hereto, whether express or implied. Fortinet reserves the right to change, modify, transfer, or otherwise revise this publication without notice, and the most current version of the publication shall be applicable.

For Product License Agreement / EULA and Warranty Terms, visit https://www.fortinet.com/content/dam/fortinet/assets/legal/EULA.pdf

FGR-60G-5G-QSG-20261005

MIX
Paper
FSC™ C173973