QuickStart Guide

FortiGate Rugged 70F Series

FGR-70F and FGR-70F-3G4G

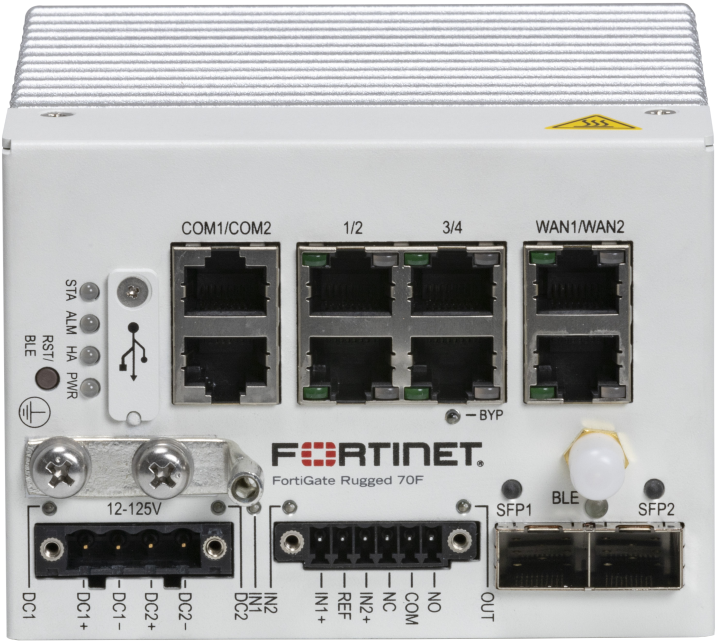

The Essentials

Register at https://support.fortinet.com for the latest threat protection updates

GUI

1. Connect Port 1 to an Ethernet port or USB-RJ45 Ethernet adapter on your computer using the provided Ethernet cable
2. Open a browser to https://192.168.1.99

CLI

1. Connect a console cable (not included) to the Console Port
2. Open a Terminal app using 9600-8-N-1

FortiExplorer App

Rapidly provision, deploy, and monitor Security Fabric components using a mobile device.

Download FortiExplorer for your OS:
https://links.fortinet.com/fortiexplorer/downloads

Default Login

https://192.168.1.99
Username: *admin*
Password: leave blank

Fortinet Documents Library

For getting started documentation, admin guides, up-to-date hardware manuals and reference resources, visit https://docs.fortinet.com/

FortiGate Cloud

Experience simplified cloud provisioning, security analytics, remote access, hosted log retention and reporting at https://fortigate.forticloud.com

FortiGate Rugged 70F

FGR-70F, FGR-70F-3G4G

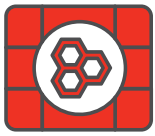

1x FortiGate Rugged 70F Device

1x QuickStart Guide

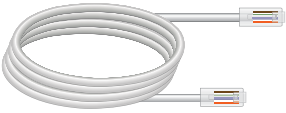

1x CAT5e Ethernet Cable

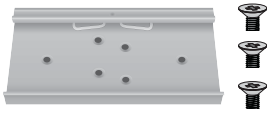

1x DIN Rail Bracket w/Screws
(3x M3×10)

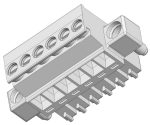

1x Digital I/O Module

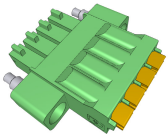

1x DC Power Connector

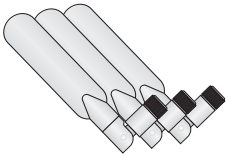

3x LTE/GPS Antennas
(3G4G model only)

Power Installation

Warnings

- The dual redundant DC input supports negative ground (+12V to +125V DC) and positive ground (-12V to -125V DC)
- DC1+ and DC2+ are the high voltage potential pins and DC1- and DC2- are the lower voltage potential pins
- Do not connect DC+ terminal to a lower voltage potential than DC- terminal
- The voltage between a DC+ and DC- must be +12V to +125V DC
- Consult a professional electrician to install the device and determine a suitable wire gauge and length
- The DC terminal block wire gauge maximum is 12 AWG; the minimum is 30 AWG
- Optional but recommended, connect earth ground using the lug plate or grounding screw

Connector Pinout

1. Connect DC1+ or DC2+ on the device terminal block to the DC power source, then connect the negative DC1- or DC2- on the terminal block.

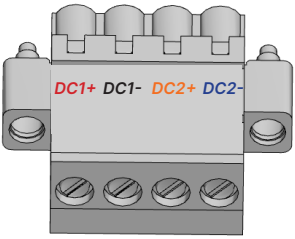

DC Input Power	DC+ Terminal	DC- Terminal
Negative Ground	+12V to +125V DC	Ground
Positive Ground	Ground	-12V to -125V DC

2. Optional - Secure the eaarth ground terminal of the device to chasses ground or earth ground.

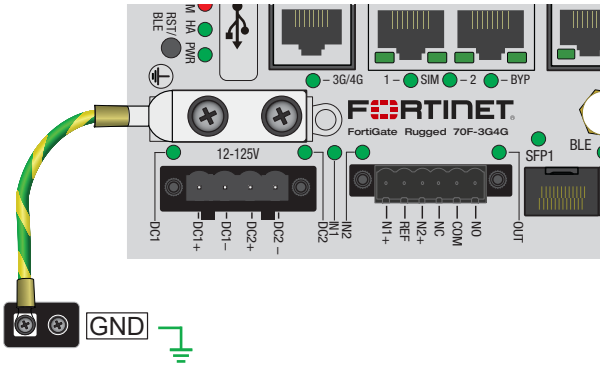

3. Insert the wired power connector into the terminal block on the device.

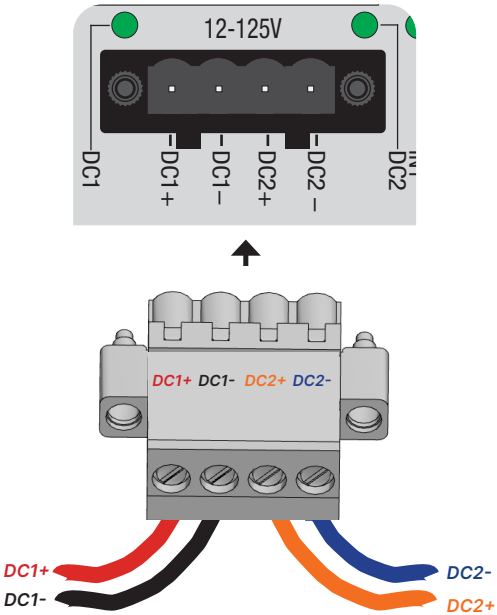

OPTIONAL: The FGR-70F Series has optional dual DC inputs for failover redundancy. If a DC input fails, the second input will supply power.

Digital I/O Connector

Refer to the Admin Guide for configuration settings.

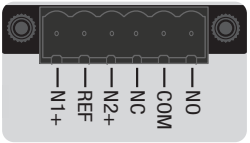

Connector	Description
IN1+	Alarm Input 1
REF	Alarm Input 1/2 Reference Ground
IN2+	Alarm Input 2
NC	Normally Closed terminal
COM	Common terminal
NO	Normally Open terminal

BIOS Options

The FortiGate Rugged 70F provides an option in the BIOS menu to set the CPU speed from high performance mode (default) to low power mode.

1. When prompted during bootup, press any key to enter the BIOS
2. Type I for system information
3. Type F to set the CPU frequency, then follow the onscreen instructions
4. Press Q twice to exit and continue the bootup process

NOTE: See the admin guide at https://docs.fortinet.com for more information.

Dimensions

The FGR-70F and FGR-70F-3G4G share the same chassis dimensions.

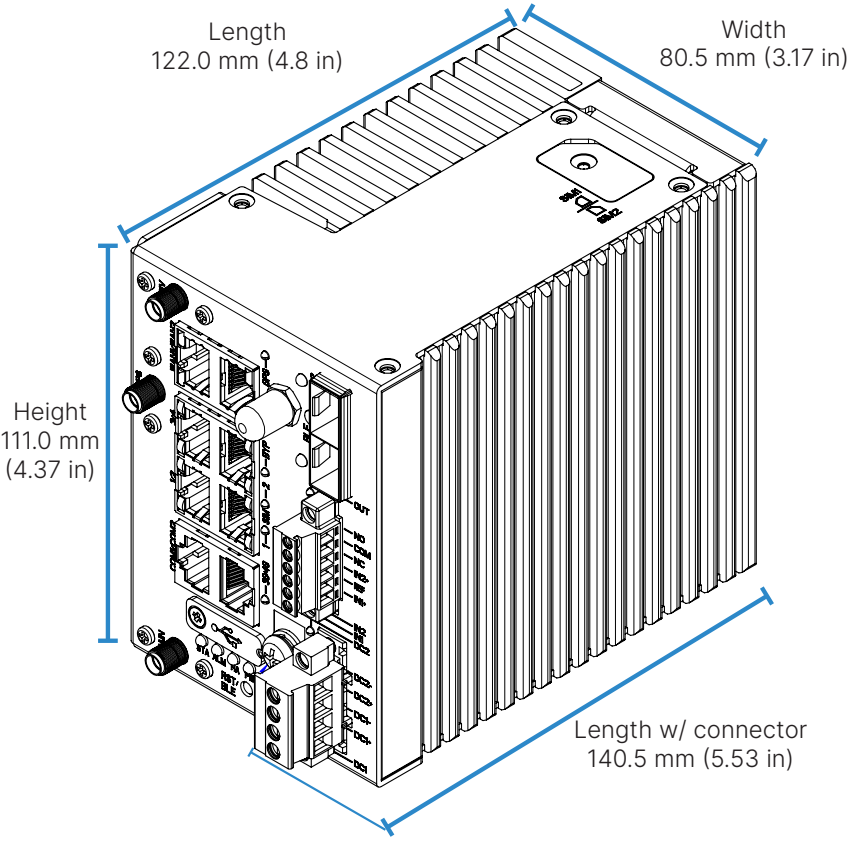

For the FGR-70F-3G4G, the antenna dimensions are shown below.

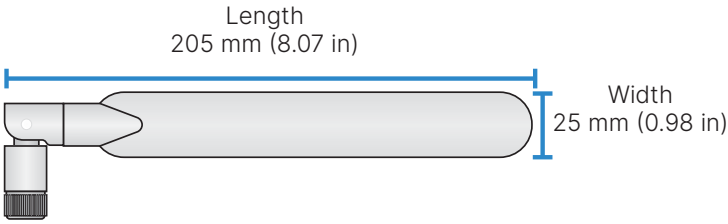

Dimensions

The FGR-70F and FGR-70F-3G4G share the same DIN bracket.

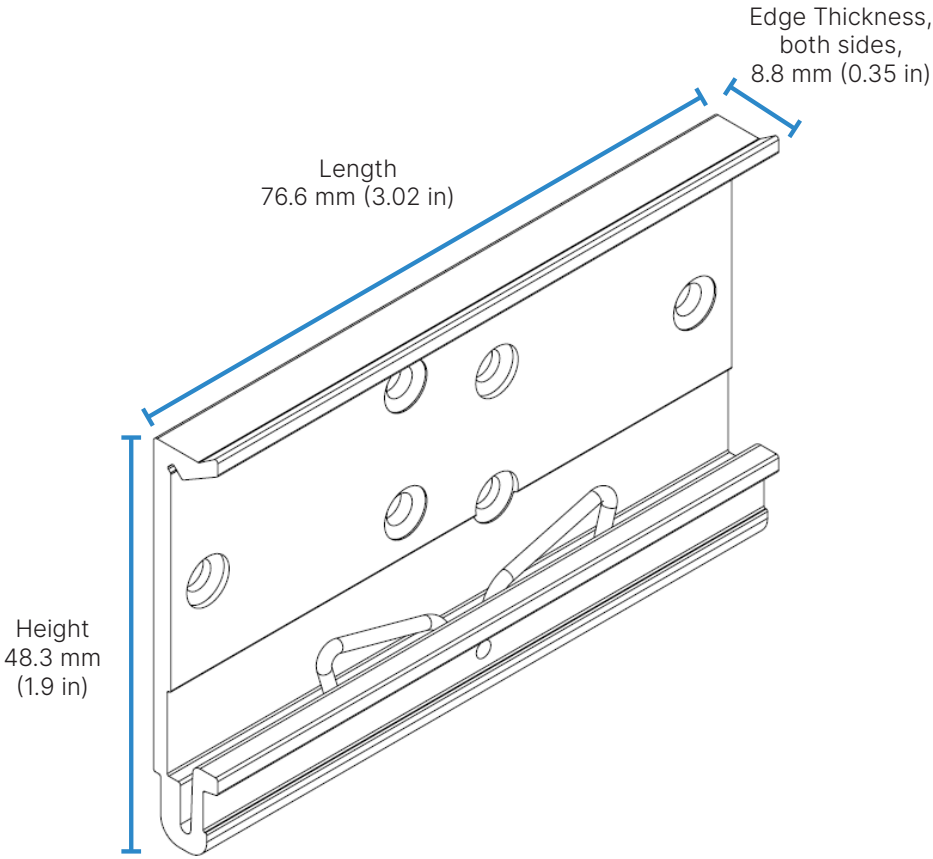

NOTE: The DIN plate thickeness is 2.4 mm (0.09 in).

Dimensions

FGR-70F-3G4G DIN Rail Mounting Bracket Dimensions

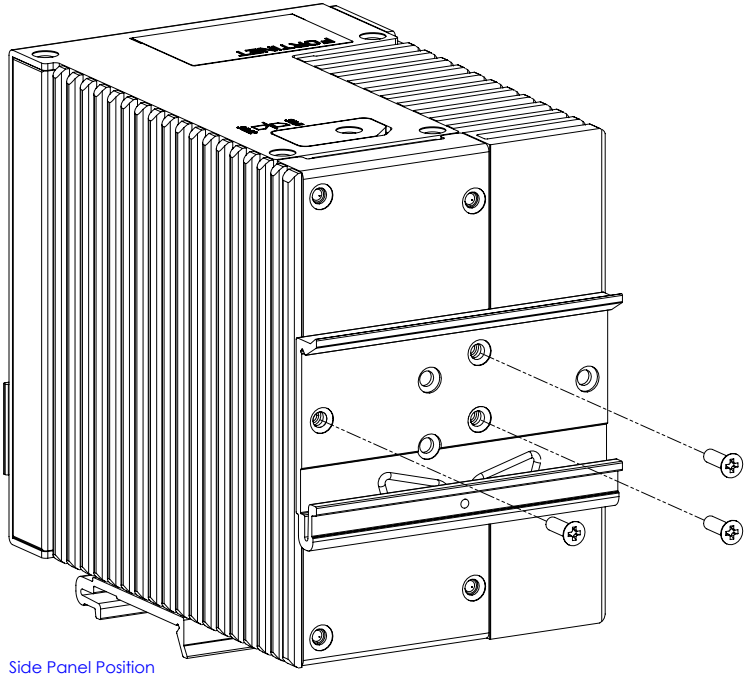

Dimensions

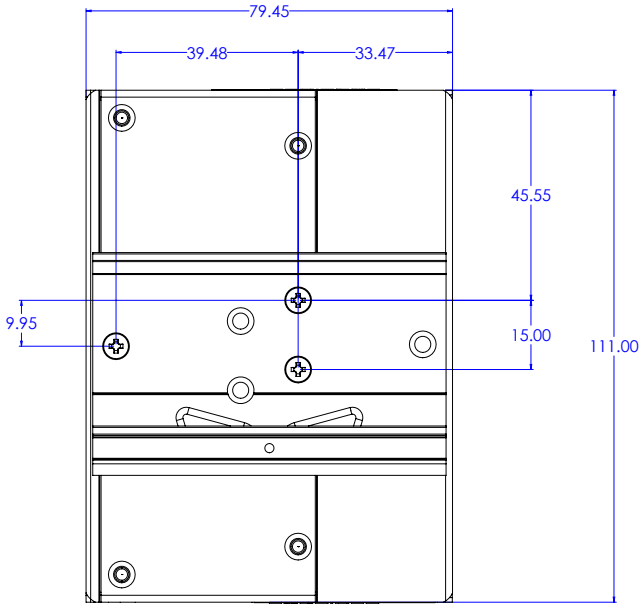

Rear Panel Position

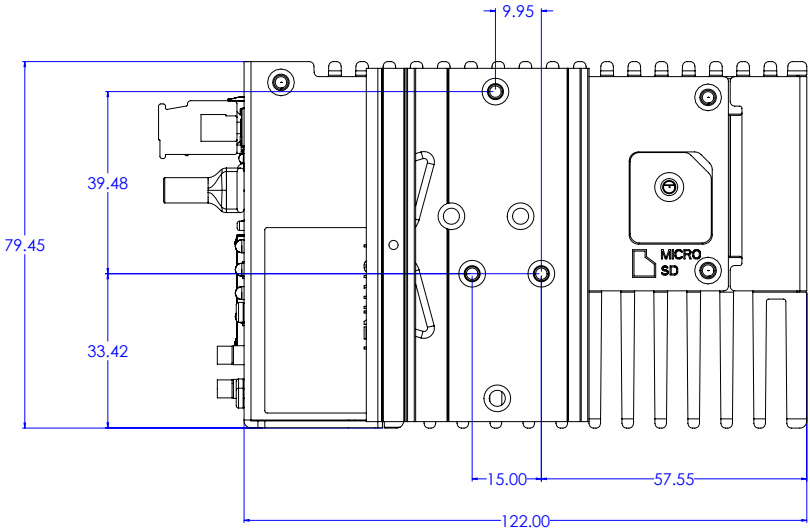

Side Panel Position

DIN Installation

The FGR-70F Series mounts on the side or rear of the device using the provided screws and DIN bracket (images only show three mounting holes).

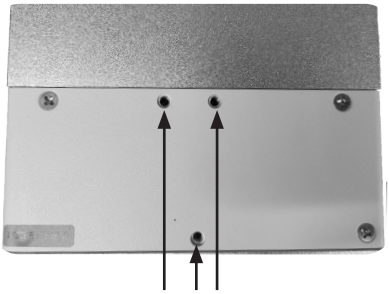

Rear Mounting Holes

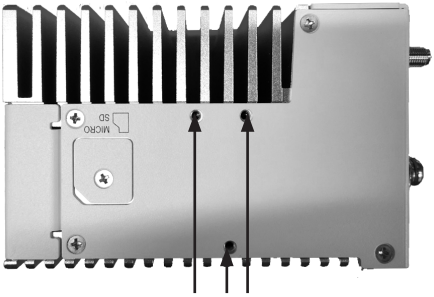

Side Mounting Holes

❶ Secure the bracket

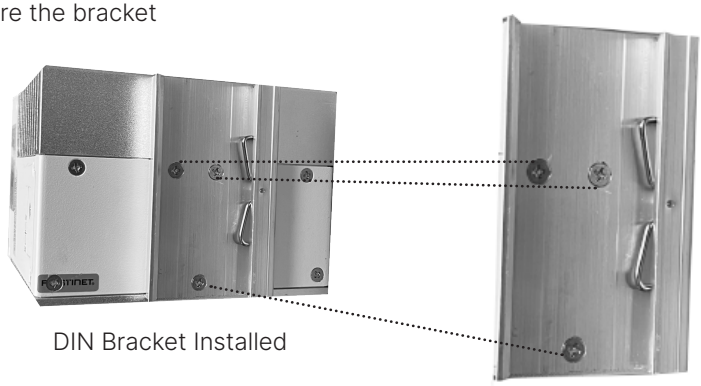

DIN Bracket Installed

DIN Bracket

❷ Mount the device to the rail

Rail Mounted

Micro SD Slot FGR-70F Series

WARNING: Industrial SD cards recommended for extreme temperature environments. Power off device to install/uninstall an SD card as the FGR-70F Series does not support hot-swapping.

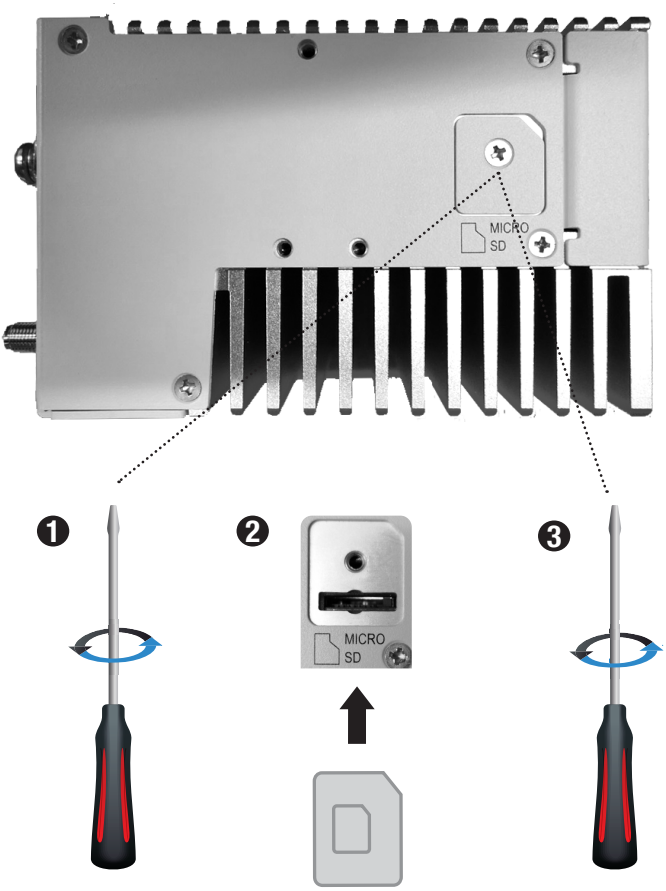

Micro SD Slot FGR-70F Series

NOTE: Industrial SIM cards recommended for extreme temperature environments. SIM1 is primary, SIM2 is secondary; SIM type is 4FF - Nano SIM. Refer to the Admin Guide for cellular wireless configuration at https://docs.fortinet.com

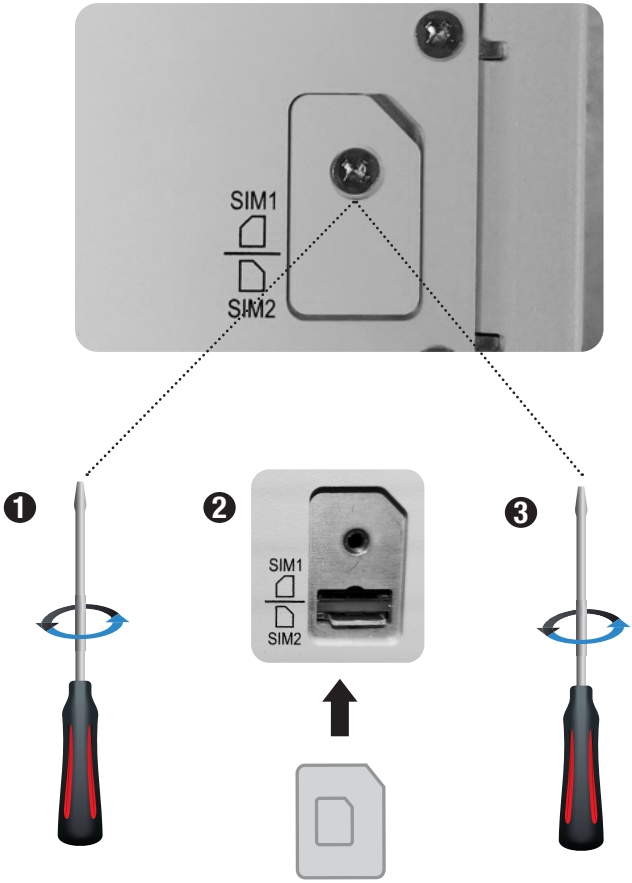

Setup

FortiExplorer App

Download FortiExplorer for your OS

or

Enable Bluetooth on your mobile device for BLE or connect a mobile USB cable into the device.

Follow the on-screen instructions

GUI

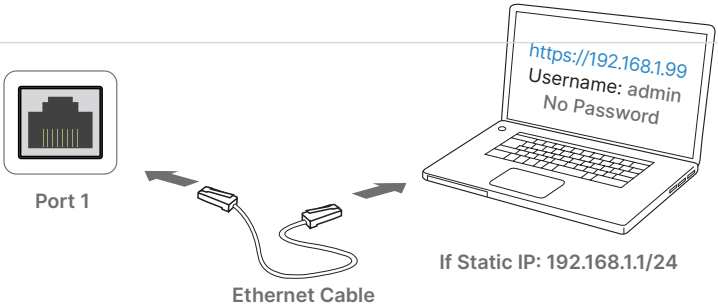

CLI

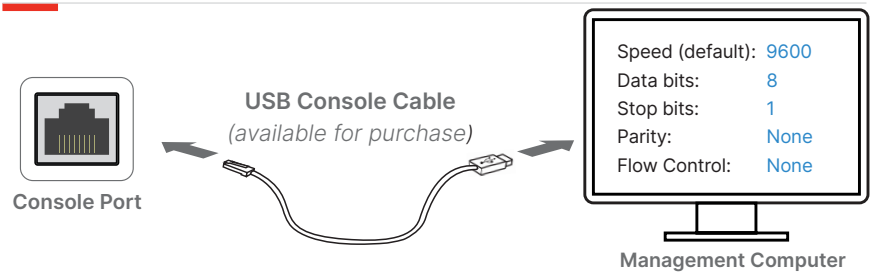

BIOS Options

The default CPU speed is set to high performance mode. Low power mode can be set in the BIOS options. See the Admin Guide for more information at https://docs.fortinet.com

Front FGR-70F

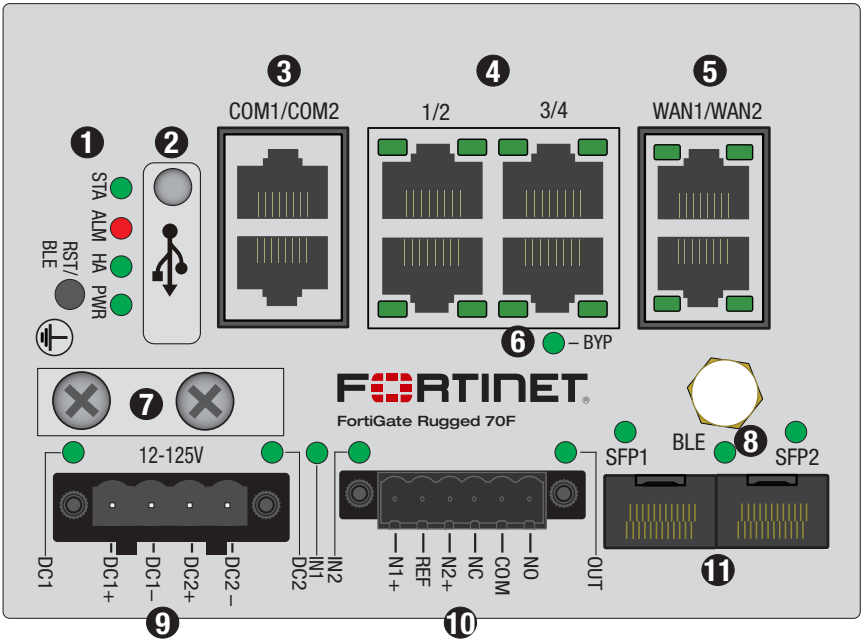

1 STA

- **Green:** Operating normally
- **Flashing Green:** Device resetting
- **Red:** Device error

ALM

- **Red:** Major alarm detected
- **Amber:** Minor alarm detected
- **Off:** No alarm detected

HA

- **Green:** HA enabled (normal)
- **Red:** HA enabled (failover)
- **Off:** HA disabled

PWR

- **Green:** Power detected
- **Off:** Power not detected

RST/BLE

Activates BLE management or restores to factory default.

2 **USB (USB 2.0)** Server port

3 **COM1 (RJ45)** Console

(Top Port)

COM2 (RJ45) Serial Data

(Bottom Port)

❹ Ports 1 to 4 (RJ45)

SPEED
- **Green:** Connected at 1000Mbps
- **Amber:** Connected at 100Mbps
- **Off:** No link established or connected at 10Mbps

ACT
- **Green:** Link established, no activity
- **Flashing Green:** Data activity
- **Off:** No link established

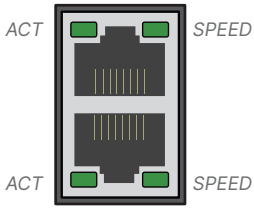

RJ45 Ports

❺ WAN1 and WAN2 Ports (RJ45)

SPEED
- **Green:** Connected at 1000Mbps
- **Amber:** Connected at 100Mbps
- **Off:** No link established or connected at 10Mbps

ACT
- **Green:** Link established, no activity
- **Flashing Green:** Data activity
- **Off:** No link established

❻ Bypass Status

- **Green:** PHY mode
- **Red:** Bypass mode

❼ **Earth Ground** optional connection

❽ BLE

- **Blue:** BLE connected
- **Flashing Blue:** BLE active
- **Off:** BLE off

❾ Power Terminals (DC1 and DC2) Redundant failover, 12V to 125V DC, 2A Max

(Note: Alarm disabled by default in the OS. Wire range is 30 - 16 AWG)

- **Green:** Power detected
- **Red:** Alarm is on; no power detected
- **Off:** No power detected

❿ Digital I/O Connector software-defined alarms. See page 6 for details.

Input (IN1 and IN2)

- **Green:** Alarm defined, not detected
- **Red:** Alarm detected
- **Off:** Alarm not defined

Output(OUT)

- **Green:** Alarm defined, not detected
- **Flashing Red:** Major output alarm
- **Red:** Minor output alarm
- **Off:** Alarm not defined

⓫ SFP1 and SFP2 (SFP)

- **Green:** Connected at 1000Mbps
- **Flashing Green:** Data activity
- **Off:** No link established

Front FGR-70F-3G4G

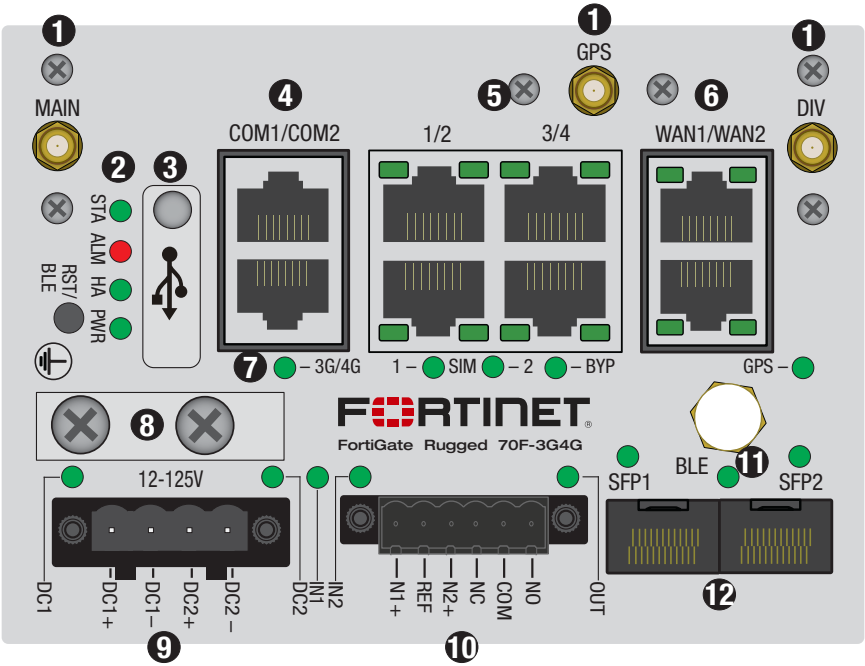

❶ **Antenna Connection (3x SMA)** WWAN and GPS antenna connections

❷ **STA**

- **Green:** Operating normally
- **Flashing Green:** Device resetting
- **Red:** Device error

ALM

- **Red:** Major alarm detected
- **Amber:** Minor alarm detected
- **Off:** No alarm detected

HA

- **Green:** HA enabled (normal)
- **Red:** HA enabled (failover)
- **Off:** HA disabled

PWR

- **Green:** Power detected
- **Off:** Power not detected

RST/BLE

Activates BLE management or restores to factory default

❸ **USB (USB 2.0)** Server port

❹ **COM1 (RJ45)** Console
(Top Port)

COM2 (RJ45) Serial Data
(Bottom Port)

❺ **Ports 1 to 4 (RJ45)**

SPEED

- **Green:** Connected at 1000Mbps
- **Amber:** Connected at 100Mbps
- **Off:** No link established or connected at 10Mbps

ACT

- **Green:** Link established, no activity
- **Flashing Green:** Data activity
- **Off:** No link established

6 WAN1 and WAN2 Ports (RJ45)

SPEED
- **Green:** Connected at 1000Mbps
- **Amber:** Connected at 100Mbps
- **Off:** No link established or connected at 10Mbps

ACT
- **Green:** Link established, no activity
- **Flashing Green:** Data activity
- **Off:** No link established

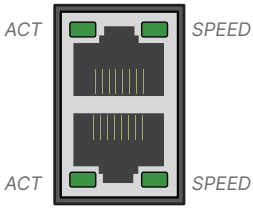

RJ45 Ports

7 3G4G and Bypass Status

3G/4G
- **Green:** 4G service on
- **Amber:** 3G service on
- **Off:** 3G/4G service off

BYP
- **Green:** PHY mode
- **Red:** Bypass mode

SIM 1 and 2
- **Green:** SIM active
- **Off:** SIM not active

GPS
- **Green:** GPS enabled
- **Off:** GPS disabled

8 **Earth Ground** optional connection

9 **Power Terminals (DC1 and DC2)** Redundant failover, 12V to 125V DC, 2A Max

(Note: Alarm disabled by default in the OS. Wire range is 30 - 16 AWG)

- **Green:** Power detected
- **Red:** Alarm is on; no power detected
- **Off:** No power detected

10 **Digital I/O Connector** software-defined alarms. See page 6 for pinout.

Input (IN1 and IN2)
- **Green:** Alarm defined, not detected
- **Red:** Alarm detected
- **Off:** Alarm not defined

Output (OUT)
- **Green:** Alarm defined, not detected
- **Flashing Red:** Major output alarm
- **Red:** Minor output alarm
- **Off:** Alarm not defined

11 BLE
- **Blue:** BLE connected
- **Flashing Blue:** BLE active
- **Off:** BLE off

12 SFP1 and SFP2 (SFP)
- **Green:** Connected at 1000Mbps
- **Flashing Green:** Data activity
- **Off:** No link established

Cautions and Warnings

Environmental specifications

Ambient operating temperature: -40°C to 75°C

Refer to specific Product Model Data Sheet for Environmental Specifications (Operating Temperature, Storage Temperature, Humidity, and Altitude)

Référez à la Fiche Technique de ce produit pour les caractéristiques environnementales (Température de fonctionnement, température de stockage, humidité et l'altitude).

Safety

Warning: Equipment intended for installation in Restricted Access Location.
Avertissement: Le matériel est conçu pour être installé dans un endroit où l'accès est restreint.

A skilled person must install the equipment.
L'équipement doit être installé par une personne qualifiée.

Grounding — To prevent damage to your equipment, connections that enter from outside the building should pass through a lightning / surge protector, and be properly grounded. Use an electrostatic discharge workstation (ESD) and/or wear an anti-static wrist strap while you work. In addition to the grounding terminal of the plug, on the back panel, there is another, separate terminal for earthing.

Mise à la terre — Pour éviter d'endommager votre matériel, assurez-vous que les branchements qui entrent à partir de l'extérieur du bâtiment passent par un parafoudre / parasurtenseur et sont correctement mis à la terre. Utilisez un poste de travail de décharge électrostatique (ESD) et / ou portez un bracelet anti-statique lorsque vous travaillez. Ce produit possède une borne de mise à la terre qui est prévu à l'arrière du produit, à ceci s'ajoute la mise à la terre de la prise.

This product has a separate protective earthing terminal provided on the back of the product in addition to the grounding terminal of the attachment plug. This separate protective earthing terminal must be permanently connected to earth with a green with yellow stripe conductor minimum size # 14 AWG and the connection is to be installed by a qualified service personnel.
Ce produit a une borne de mise à la terre séparé sur le dos de l'appareil, en plus de la borne de mise à la terre de la fiche de raccordement. Cette borne de mise à la terre séparée doit être connecté en permanence à la terre avec un conducteur vert avec la taille bande jaune de minimum # 14 AWG et la connexion doit être installé par un personnel qualifié.

Regulatory Notices

Federal Communication Commission (FCC) – USA

This device complies with Part 15 of the FCC Rules. Operation is subject to the following two conditions:
(1) this device may not cause harmful interference, and
(2) this device must accept any interference received; including interference that may cause undesired operation.

This equipment has been tested and found to comply with the limits for a Class A digital device, pursuant to Part 15 of the FCC Rules. These limits are designed to provide reasonable protection against harmful interference when the equipment is operated in a commercial environment. This equipment generates, uses, and can radiate radio frequency energy, and if it is not installed and used in accordance with the instruction manual, it may cause harmful interference to radio communications. Operation of this equipment in a residential area is likely to cause harmful interference, in which case the user will be required to correct the interference at his own expense.

WARNING: Any changes or modifications to this product not expressly approved by the party responsible for compliance could void the user's authority to operate the equipment.

This equipment complies with FCC radiation exposure limits set forth for an uncontrolled environment. This equipment should be installed and operated with minimum distance 20cm between the radiator and your body. This transmitter must not be co-located or operating in conjunction with any other antenna or transmitter.

Industry Canada Equipment Standard for Digital Equipment (ICES) – Canada

CAN ICES-003 (A) / NMB-003 (A)

This digital apparatus does not exceed the Class A limits for radio noise emissions from digital apparatus set out in the Radio Interference Regulations of the Canadian Department of Communications.

Cet appareil numérique n'émet pas de bruits radioélectriques dépassant les limites applicables aux appareils numériques de la classe A prescrites dans le Règlement sur le brouillage radioélectrique édicte par le ministère des Communications du Canada.

Innovation, Science and Economic Development (ISED) – Canada

This device contains licence-exempt transmitter(s)/receiver(s) that comply with Innovation, Science and Economic Development Canada's licence-exempt RSS(s). Operation is subject to the following two conditions:

1. This device may not cause interference.
2. This device must accept any interference, including interference that may cause undesired operation of the device.

L'émetteur/récepteur exempt de licence contenu dans le présent appareil est conforme aux CNR d'Innovation, Sciences et Développement économique Canada applicables aux appareils radio exempts de licence. L'exploitation est autorisée aux deux conditions suivantes:

1 .L'appareil ne doit pas produire de brouillage;
2 .L'appareil doit accepter tout brouillage radioélectrique subi, même si le brouillage est susceptible d'en compromettre le fonctionnement.

This equipment complies with ISED radiation exposure limits set forth for an uncontrolled environment. This equipment should be installed and operated with minimum distance 20cm between the radiator and your body.

Cet équipement est conforme aux limites d'exposition aux rayonnements ISED établies pour un environnement non contrôlé. Cet équipement doit être installé et utilisé avec un minimum de 20cm de distance entre la source de rayonnement et votre corps.

This radio transmitter (IC: 7280B-2401T25) has been approved by ISED to operate with the antenna types listed below with the maximum permissible gain and required antenna impedance for each antenna type indicated. Antenna types not included in this list, having a gain greater than the maximum gain indicated for that type, are strictly prohibited for use with this device.

Le présent émetteur radio (IC: 7280B-2401T25) a été approuvé par ISED pour fonctionner avec les types d'antenne énumérés ci-dessous et ayant un gain admissible maximal et l'impédance requise pour chaque type d'antenne. Les types d'antenne non inclus dans cette liste, ou dont le gain est supérieur au gain maximal indiqué, sont strictement interdits pour l'exploitation de l'émetteur.

This device and it's antennas(s) must not be co-located or operating in conjunction with any other antenna or transmitter except in accordance with IC multi-transmitter product procedures.

Cet appareil et son antenne (s) ne doit pas être co-localisés ou fonctionnement en association avec une autre antenne ou transmetteur.

Antenna type	Connector	Gain (dBi)	Network
Monopole	I-PEX	1.53	Bluetooth

European Conformity (CE) - EU

This is a Class A product. In a domestic environment, this product may cause radio interference, in which case the user may be required to take adequate measures.

CE

Standard	Frequency Range	Max. Transmit Power
Bluetooth	2402–2480 MHz	10 dBm (EIRP)

The product transmits within the frequency ranges and less than or equal to the power listed below:

For FGR-70F-3G4G:
WCDMA B1 less than 24dBm
WCDMA B8 less than 24dBm
LTE B1 less than 24dBm
LTE B3 less than 24dBm
LTE B7 less than 23dBm
LTE B8 less than 24dBm
LTE B20 less than 24dBm
LTE B28 less than 24dBm
LTE B42 less than 23dBm
LTE B43 less than 23dBm

This equipment should be installed and operated with minimum distance 20cm between the radiator and your body.

Simplified EU Declaration of Conformity

This declaration is only valid for Fortinet products (including combinations of software, firmware and hardware) provided by Fortinet or Fortinet's authorized partners to the end-customer directly for use within the EU or countries that have implemented the EU Directives and/or spectrum regulation. Any Fortinet products not obtained directly from Fortinet or Fortinet's authorized partners may not comply with EU Directives and Fortinet makes no assurances for such products.

Български
Този продукт е в съответствие с Директива 2014/53/ЕС.

Česky
Tento produkt je v souladu se směrnicí 2014/53/EU.

Dansk
Dette produkt er i overensstemmelse med direktiv 2014/53/EU.

Deutsch
Dieses Produkt entspricht der Richtlinie 2014/53/EU.

Eesti
See toode vastab direktiivile 2014/53/EL.

English
This product is in compliance with Directive 2014/53/EU.

Español
Este producto cumple con la Directiva 2014/53/UE.

Ελληνική
Το προϊόν αυτό συμμορφώνεται με την Οδηγία 2014/53/ΕΕ.

Français
Ce produit est conforme à la Directive 2014/53/UE.

Hrvatski
Ovaj proizvod je u skladu s Direktivom 2014/53/EU.

Italiano
Questo prodotto è conforme alla Direttiva 2014/53/EU.

Latviski
Šis produkts atbilst Direktīvai 2014/53/ES.

Lietuvių
Šis gaminys atitinka direktyvą 2014/53/ES.

Malti
Dan il-prodott huwa konformi mad-Direttiva 2014/53/UE.

Magyar
Ez a termék megfelel a 2014/53/EU irányelvnek.

Nederlands
Dit product is in overeenstemming met Richtlijn 2014/53/EU.

Norsk
Dette produktet er i samsvar med direktiv 2014/53/EU.

Polski
Ten produkt jest zgodny z dyrektywą 2014/53/UE.

Português
Este produto está em conformidade com a Diretiva 2014/53/UE.

Rumunski
Acest produs este în conformitate cu Directiva 2014/53/UE.

Slovensky
Tento produkt je v súlade so smernicou 2014/53/EÚ.

Slovensko
Ta izdelek je v skladu z Direktivo 2014/53/EU.

Suomi
Tämä tuote on direktiivin 2014/53/EU mukainen.

Svenska
Denna produkt överensstämmer med direktiv 2014/53/EU.

Note: The full Declaration of Conformity for this product is available in the link below:
https://site.fortinet.com/ProductRegulatory/EU

Waste Electrical and Electronic Equipment (WEEE)
This symbol means that according to local laws and regulations your product and/or its battery shall be disposed of separately from household waste. When this product reaches its end of life, take it to a collection point designated by local authorities. Proper recycling of your product will protect human health and the environment.

UK Conformity Assessed (UKCA) – United Kingdom

The product transmits within the frequency ranges and less than or equal to the power listed below:

Standard	Frequency Range	Max. Transmit Power
Bluetooth	2402–2480 MHz	10 dBm (EIRP)

For FGR-70F-3G4G:
WCDMA B1 less than 24dBm
WCDMA B8 less than 24dBm
LTE B1 less than 24dBm
LTE B3 less than 24dBm
LTE B7 less than 23dBm
LTE B8 less than 24dBm
LTE B20 less than 24dBm
LTE B28 less than 24dBm
LTE B42 less than 23dBm
LTE B43 less than 23dBm

This equipment should be installed and operated with minimum distance 20cm between the radiator and your body.

This product is in compliance with **Statutory Instrument 1206 Radio Equipment Regulations 2017**

The full Declaration of Conformity for this product is available in the link below:
https://site.fortinet.com/ProductRegulatory/UK

Voluntary Control Council for Interference (VCCI) – Japan

この装置は、クラスA機器です。この装置を住宅環境で使用すると電波妨害を引き起こすことがあります。この場合には使用者が適切な対策を講ずるよう要求されることがあります。

ＶＣＣＩ－Ａ

Bureau of Standards Metrology and Inspection (BSMI) – Taiwan

限用物質含有情況表 (RoHS Table) 請到以下 網址下載:

https://www.fortinet.com/bsmi

警告： 為避免電磁干擾，本產品不應安裝或使用於住宅環境。

請仔細閱讀以下說明

本設備勿置於潮濕處。

連接至電源前，請先檢查電壓。

當設備不用時，請將所有電源線拔除，避免電壓不穩而造成傷害。

勿將任何液體戳入設備中，避免線路短路。

基於安全理由，只有受到專業訓練的從業人員，才可以打開本設備。

請勿自行調整或修理已通電的設備，以確保您的安全。

如不小心受傷，請立刻找急救人員給予您適當的救護，千萬別因傷勢輕微而忽略自己的傷勢。

雷射設備非用戶維修設備，請與生產商聯繫維修事宜。

注意: 要斷開電源，請將所有電源線從本機上拔下

英屬蓋曼群島商防特網股份有限公司台灣分公司

地址：台北市內湖區行愛路176號2樓

電話：(02) 27961666

National Telecommunications Commission (NCC) – Taiwan

NCC警語

取得審驗證明之低功率射頻器材，非經核准，公司、商號或使 用者均不得擅自變更頻率、加大功率或變更原設計之特性及功能。低功率射頻器材之使用不得影響飛航安全及干擾合法通信；經發現有干擾現象時，應立即停用，並改善至無干擾時方得繼續使用。前述合法通信，指依電信管理法規定作業之無線電通信。低功率射頻器材須忍受合法通信或工業、科學及醫療用電波輻射性電機設備之干擾。

減少電磁波影響，請妥適使用

電磁波曝露量MPE標準值0.9 mW/cm², 送測產品實測值為：0.08069 mW/ cm², 建議使用時至少距離人體 20 cm.

Agência Nacional de Telecomunicações (ANATEL) – Brazil

CISPR22
Este produto não é apropriado para uso em ambientes domésticos, pois poderá causar interferências eletromagnéticas que obrigam o usuário a tomar medidas necessárias para minimizar estas interferências.

Resolução 680 – ATO 14448
Este equipamento não tem direito à proteção contra interferência prejudicial e não pode causar interferência em sistemas devidamente autorizados. Para maiores informações, consulte o site da ANATEL – www.gov.br/anatel.

www.fortinet.com

April 8, 2026

Copyright © 2026 Fortinet, Inc. All rights reserved. Fortinet®, FortiGate®, FortiCare® and FortiGuard®, and certain other marks are registered trademarks of Fortinet, Inc., and other Fortinet names herein may also be registered and/or common law trademarks of Fortinet. All other product or company names may be trademarks of their respective owners. Performance and other metrics contained herein were attained in internal lab tests under ideal conditions, and actual performance and other results may vary. Network variables, different network environments and other conditions may affect performance results. Nothing herein represents any binding commitment by Fortinet, and Fortinet disclaims all warranties, whether express or implied, except to the extent Fortinet enters a binding written contract, signed by Fortinet's SVP Legal and above, with a purchaser that expressly warrants that the identified product will perform according to certain expressly-identified performance metrics and, in such event, only the specific performance metrics expressly identified in such binding written contract shall be binding on Fortinet. For absolute clarity, any such warranty will be limited to performance in the same ideal conditions as in Fortinet's internal lab tests. Fortinet disclaims in full any covenants, representations, and guarantees pursuant hereto, whether express or implied. Fortinet reserves the right to change, modify, transfer, or otherwise revise this publication without notice, and the most current version of the publication shall be applicable.

For Product License Agreement / EULA and Warranty Terms, visit https://www.fortinet.com/content/dam/fortinet/assets/legal/EULA.pdf

FGR-70F-Series-QSG-20260408

FSC www.fsc.org MIX Paper FSC™ C173973