QuickStart Guide

FortiWiFi 50G DSL

FWF-50G-DSL

The Essentials

Secure your Network

Register at https://support.fortinet.com for the latest threat protection updates

WiFi

1. Connect to the default ***fortinet*** wireless network
2. Open a browser to https://192.168.1.99

LAN

1. Connect Port 1 to an Ethernet port or USB-RJ45 Ethernet adapter on your computer using the provided Ethernet cable
2. Open a browser to https://192.168.1.99

CLI

1. Connect a console cable (not included) to the Console Port
2. Open a Terminal app using 9600-8-N-1

Default Logins

OS

https://192.168.1.99
Username: *admin*
Password: leave blank

FortiWiFi

SSID: *fortinet*
Password: *fortinet*

Fortinet Documents Library

For getting started documentation, admin guides, up-to-date hardware manuals and reference resources, visit https://docs.fortinet.com/

FortiGate Cloud

Experience simplified cloud provisioning, security analytics, remote access, hosted log retention and reporting at https://fortigate.forticloud.com

FortiExplorer Go

Rapidly provision, deploy and manage your Fortinet Security Fabric Platform, free on iOS and Android: https://docs.fortinet.com/product/fortiexplorer-go/

GET IT ON Google Play

Download on the App Store

Package Contents

FortiWiFi 50G DSL

FWF-50G-DSL

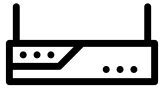

1x FortiWiFi Device

1x QuickStart Guide

3x AC Adapter Plugs
(US, EU, UK)

1x DC Power Adapter

1x Ethernet Cable

3x Antennas

1x DSL Cable

Setup

FortiExplorer Go

Install FortiExplorer Go

Enable Bluetooth

Follow the on-screen instructions

CLI

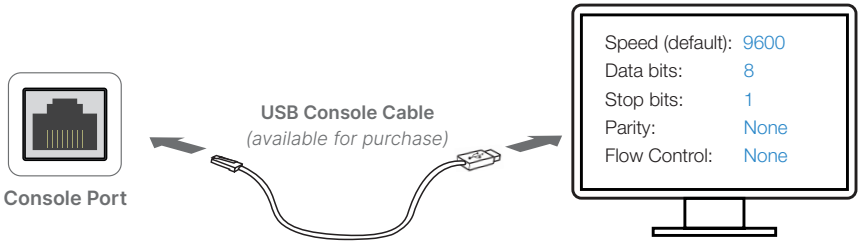

GUI

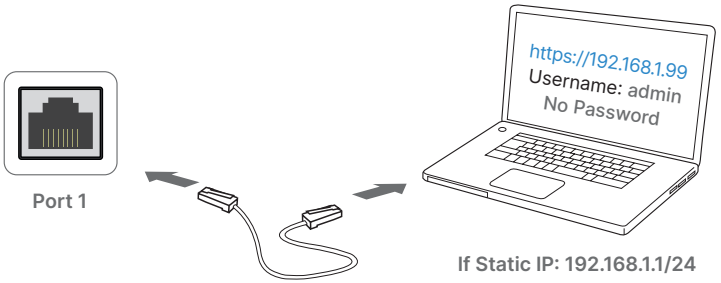

FortiGate Cloud

Login to https://fortigate.forticloud.com using your Fortinet Credentials, then click **Add FortiGate** and enter the Cloudkey

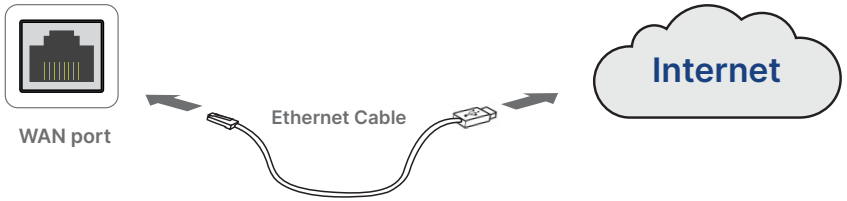

Front FWF-50G-DSL

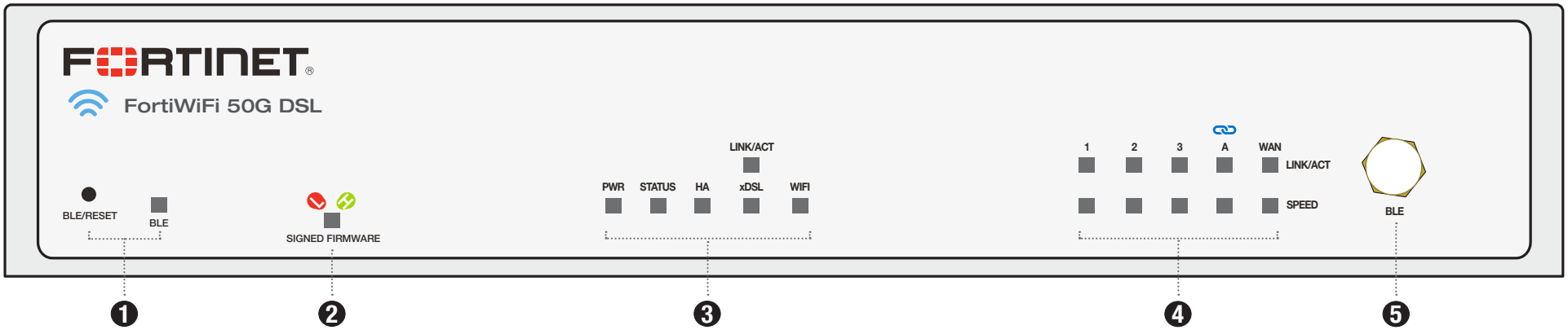

1 **BLE / RESET** Press to enable BLE; press and hold for system reset during STATUS reset window
- **Blue**: BLE on
- **Flashing Blue**: BLE in discovery
- **Off**: BLE off

2 **SIGNED FIRMWARE** BIOS Security Level
Controlled by Signed Firmware Switch, see Admin Guide at https://docs.fortinet.com
- **High**: Unsigned firmware blocked (default)
- **Low**: Unsigned firmware allowed with a warning

3 **PWR**
- **Green**: Power detected
- **Off**: Power not detected

STATUS
- **Green**: Operating normally
- **Flashing Green**: Reset window
- **Off**: Device is off

HA
- **Green**: HA enabled (normal)
- **Amber**: HA enabled (failover)
- **Off**: HA disabled

LINK/ACT
- **Green**: DSL connected
- **Flashing Green**: DSL activity
- **Off**: DSL not connected

xDSL
- **Green**: VDSL connection
- **Amber**: ADSL connection
- **Off**: No DSL connection

WIFI
- **Green**: WiFi is on
- **Flashing Green**: WiFi activity
- **Off**: WiFi is off

4 **Ethernet Ports**
LINK/ACT
- **Green**: Connected
- **Flashing Green**: Data activity
- **Off**: Not connected

SPEED
- **Green**: 1 Gbps
- **Amber**: 100 Mbps
- **Off**: 10 Mbps or not connected

5 **BLE Antenna**

Rear FWF-50G-DSL

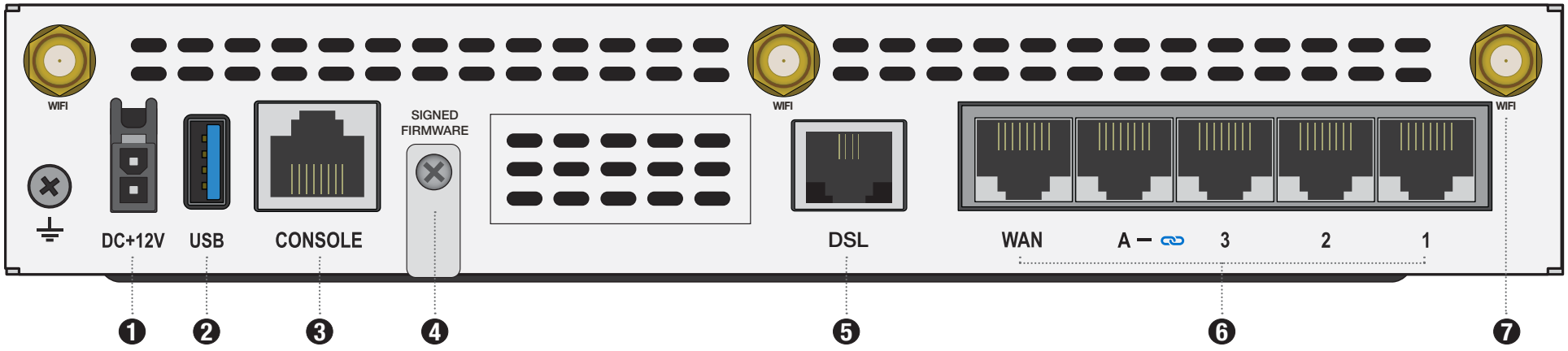

1. **Power Input** 12V DC, 100-240V AC, 50/60Hz adapter
2. **USB 3.0 Port (USB A)**
3. **CONSOLE Port (RJ45)** CLI management
4. **SIGNED FIRMWARE Switch**
5. **DSL Port (RJ11)**
6. **Ports (5x RJ45)** WAN, A – FortiLink, 3, 2, 1
7. **Antenna Connector (3x SMA)**

Cautions and Warnings

Environmental specifications

Ambient operating temperature: 0°C to 40°C

Refer to specific Product Model Data Sheet for Environmental Specifications (Operating Temperature, Storage Temperature, Humidity, and Altitude)

Référez à la Fiche Technique de ce produit pour les caractéristiques environnementales (Température de fonctionnement, température de stockage, humidité et l'altitude).

Safety

Battery – Risk of explosion if the battery is replaced by an incorrect type. Do not dispose of batteries in a fire. They may explode. Dispose of used batteries according to your local regulations. IMPORTANT: Switzerland: Annex 4.10 of SR814.013 applies to batteries.

Batterie – Risque d'explosion si la batterie est remplacée par un type incorrect. Ne jetez pas les batteries au feu. Ils peuvent exploser. Jetez les piles usagées conformément aux réglementations locales. IMPORTANT: Suisse: l'annexe 4.10 de SR814.013 s'appliquent aux batteries.

警告
本電池如果更換不正確會有爆炸的危險
請依製造商說明書處理用過之電池

This product is intended to be supplied by a Listed pluggable A via Class I external power supply adapter by means of a power cord connected to a socket-outlet with earthing connection.

Ce produit est destiné à être alimenté par un adaptateur d'alimentation externe de classe I par l'intermédiaire d'un cordon d'alimentation enfichable de classe A qui doit être branché à une prise de courant avec terre.

Grounding — To prevent damage to your equipment, connections that enter from outside the building should pass through a lightning / surge protector, and be properly grounded. Use an electrostatic discharge workstation (ESD) and/or wear an anti-static wrist strap while you work. In addition to the grounding terminal of the plug, on the back panel, there is another, separate terminal for earthing.

Mise à la terre — Pour éviter d'endommager votre matériel, assurez-vous que les branchements qui entrent à partir de l'extérieur du bâtiment passent par un parafoudre / parasurtenseur et sont correctement mis à la terre. Utilisez un poste de travail de décharge électrostatique (ESD) et / ou portez un bracelet anti-statique lorsque vous travaillez. Ce produit possède une borne de mise à la terre qui est prévu à l'arrière du produit, à ceci s'ajoute la mise à la terre de la prise.

This product has a separate protective earthing terminal provided on the back of the product in addition to the grounding terminal of the attachment plug. This separate protective earthing terminal must be permanently connected to earth with a green with yellow stripe conductor minimum size # 22AWG and the connection is to be installed by a qualified service personnel.

Ce produit a une borne de mise à la terre séparé sur le dos de l'appareil, en plus de la borne de mise à la terre de la fiche de raccordement. Cette borne de mise à la terre séparée doit être connecté en permanence à la terre avec un conducteur vert avec la taille bande jaune de minimum # 22AWG et la connexion doit être installé par un personnel qualifié.

Warning: Equipment intended for installation in Restricted Access Location.
Avertissement: Le matériel est conçu pour être installé dans un endroit où l'accès est restreint.

Disconnect ES2 (TNV) circuit connector before removing cover.
Débranchez le câble du circuit ES2 (TNV) avant d'enlever le couvercle.

IMPORTANT SAFETY INSTRUCTIONS - When using your telephone equipment, basic safety precautions should always be followed to reduce the risk of fire, electric shock and injury to persons, including the following:
CONSIGNES DE SÉCURITÉ IMPORTANTES - Lorsque vous utilisez votre équipement téléphonique, des précautions de sécurité de base doivent toujours être suivies pour réduire le risque d'incendie, de choc électrique et de blessures corporelles, y compris ce qui suit:

-Do not use this product near water for example, near a bathtub, washbowl, kitchen sink or laundry tub, in a wet basement or near a swimming pool.
-Ne pas utiliser ce produit près de l'eau, par exemple, près d'une baignoire, d'un lavabo, d'un évier de cuisine ou cuve à lessive, dans un sous-sol humide ou près d'une piscine.

-Avoid using a telephone (other than a cordless type) during an electrical storm. There may be a remote risk of electric shock from lightning.
-Évitez d'utiliser un téléphone (autre qu'un téléphone sans fil) pendant un orage. Il peut y avoir un risque de choc électrique par la foudre.

-Do not use the telephone to report a gas leak in the vicinity of the leak.
-Ne pas utiliser le téléphone pour rapporter une fuite de gaz à proximité de la fuite.

-Use only the power cord and batteries indicated in this manual. Do not dispose of batteries in a fire. They may explode. Check with local codes for possible special disposal instructions.
-Utilisez uniquement le cordon d'alimentation et les piles indiquées dans ce manuel. Ne jetez pas les batteries au feu. Ils peuvent exploser. Vérifiez les codes locaux pour connaître les instructions spéciales d'élimination.

SAVE THESE INSTRUCTIONS
CONSERVER CES INSTRUCTIONS

CAUTION: To reduce the risk of fire, use only No. 26 AWG or larger (e.g., 24 AWG) UL Listed or CSA Certified Telecommunication Line Cord
ATTENTION: Pour réduire le risque d'incendie, utilisez uniquement 26 AWG ou supérieur (par exemple, 24 AWG) lister UL ou cordon certifié CSA

Regulatory Notices

Federal Communication Commission (FCC) – USA

This device complies with Part 15 of the FCC Rules. Operation is subject to the following two conditions:
(1) this device may not cause harmful interference, and
(2) this device must accept any interference received; including interference that may cause undesired operation.

This equipment has been tested and found to comply with the limits for a Class B digital device, pursuant to Part 15 of the FCC Rules. These limits are designed to provide reasonable protection against harmful interference in residential installation. This equipment generates, uses, and can radiate radio frequency energy, and if it is not installed and used in accordance with the instruction manual, it may cause harmful interference to radio communications. However, there is no guarantee that interference will not occur in a particular installation.

If this equipment does cause harmful interference to radio or television reception, which can be determined by turning the equipment off and on, the user is encouraged to try to correct the interference by one or more of the following measures:

Reorient or relocate the receiving antenna.
Increase the separation between the equipment and receiver.
Connect the equipment into an outlet on a circuit different from that to which the receiver is connected.
Consult the dealer or an experienced radio/TV technician for help.

WARNING: Any changes or modifications to this unit not expressly approved by the party responsible for compliance could void the user's authority to operate the equipment

This equipment complies with FCC radiation exposure limits set forth for an uncontrolled environment. This equipment should be installed and operated with minimum distance 20cm between the radiator and your body. This transmitter must not be co-located or operating in conjunction with any other antenna or transmitter.

This device meets all the other requirements specified in Part 15E, Section 15.407 of the FCC Rules.

This equipment complies with ANSI TIA/EIA/968-B and Part 68 of the FCC rules and the requirements adopted by the ACTA. On the base of this equipment is a label that contains, among other information, a product identifier in the format US: AAAEQ##TXXXX. If requested, this number must be provided to the telephone company.

This equipment uses the following USOC jacks: RJ11.

A plug and jack used to connect this equipment to the premises wiring and telephone network must comply with the applicable FCC Part 68 rules and requirements adopted by the ACTA. A compliant telephone cord and modular plug is provided with this product. It is designed to be connected to a compatible modular jack that is also compliant. See installation instructions for details.

The REN is used to determine the number of devices that may be connected to a telephone line. Excessive RENs on a telephone line may result in the devices not ringing in response to an incoming call. In most but not all areas, the sum of RENs should not exceed five (5.0). To be certain of the number of devices that may be connected to a line, as determined by the total REN, contact the local telephone company. The REN for this product is separately shown on the label and also part of the product identifier that has the format US: AAAEQ##TXXXX. The digits represented by ## are the REN without a decimal point (e.g., 03 is a REN of 0.3).
If you experience trouble with this equipment, for repair or warranty information, please refer to Fortinet's End-User License Agreement which set forth the terms and limitation of Fortinet's product warranty and contact the following address and phone number for additional information.

Fortinet, Inc.
899 Kifer Road, Sunnyvale, CA 94086 USA
1-866-393-9960 (US and Canada)
1-613-725-2466 (International)
http://www.fortinet.com

It is recommended that the customer install an AC surge arrester in the AC outlet to which this device is connected. This is to avoid damaging the equipment caused by local lightning strikes and other electrical surges.

This equipment may not be used on coin service provided by the telephone company. Connection to party line service is subject to state tariffs.

Innovation, Science and Economic Development (ISED) – Canada

This Class B digital apparatus complies with Canadian ICES-003.

Cet appareil numérique de la classe B est conforme à la norme NMB-003 du Canada.

This device contains licence-exempt transmitter(s)/receiver(s) that comply with Innovation, Science and Economic Development Canada's licence-exempt RSS(s). Operation is subject to the following two conditions:

1. This device may not cause interference.
2. This device must accept any interference, including interference that may cause undesired operation of the device.

L'émetteur/récepteur exempt de licence contenu dans le présent appareil est conforme aux CNR d'Innovation, Sciences et Développement économique Canada applicables aux appareils radio exempts de licence. L'exploitation est autorisée aux deux conditions suivantes:

1. L'appareil ne doit pas produire de brouillage;
2. L'appareil doit accepter tout brouillage radioélectrique subi, même si le brouillage est susceptible d'en compromettre le fonctionnement.

For product available in the USA/Canada market, only channel 1~11 can be operated. Selection of other channels is not possible.

Pour les produits disponibles aux États-Unis / Canada du marché, seul le canal 1 à 11 peuvent être exploités. Sélection d'autres canaux n'est pas possible.

This equipment complies with ISED radiation exposure limits set forth for an uncontrolled environment. This equipment should be installed and operated with minimum distance 20cm between the radiator & your body.

Cet équipement est conforme aux limites d'exposition aux rayonnements ISED établies pour un environnement non contrôlé. Cet équipement doit être installé et utilisé avec un minimum de 20cm de distance entre la source de rayonnement et votre corps.

The maximum antenna gain permitted for devices in the band 5725-5850 MHz shall be such that the equipment still complies with the e.i.r.p. limits specified for point-to-point and non-point-to-point operation as appropriate.

Le gain maximal d'antenne permis (pour les dispositifs utilisant la bande 5725-5850 MHz)
doit se conformer à la limite de p.i.r.e. spécifiée pour l'exploitation point à point et non point à point, selon le cas.

The maximum antenna gain permitted for devices in the bands 5250-5350 MHz and 5470-5725 MHz shall comply with the e.i.r.p. limit; and

Le gain maximal d'antenne permis pour les dispositifs utilisant les bandes 5250-5350 MHz et 5470-5725 MHz doit se conformer à la limite de p.i.r.e.;

The worst-case tilt angle(s) necessary to remain compliant with the e.i.r.p. elevation mask requirement set forth in Section 6.2.2(3) shall be clearly indicated.

Les pires angles d'inclinaison nécessaires pour rester conforme à l'exigence de la p.i.r.e. applicable au masque d'élévation, et énoncée à la section 6.2.2 3), doivent être clairement indiqués.

Caution: The device for the band 5150-5250 MHz is only for indoor usage to reduce potential for harmful interference to co-channel mobile satellite systems.

Attention: Le dispositif de la bande 5150-5250 MHz est réservé à un usage intérieur afin de réduire l'interférence nuisible potentielle aux systèmes mobiles par satellite co-canal.

Caution: The maximum antenna gain permitted for devices in the bands 5250-5350 MHz and 5470-5725 MHz shall comply with the e.i.r.p. limit; and the maximum antenna gain permitted for devices in the band 5725-5825 MHz shall comply with the e.i.r.p. limits specified for point-to-point and non point-to-point operation as appropriate.

Attention: Le gain maximal d'antenne permis pour les dispositifs utilisant les bandes 5 250-5 350 MHz et 5 470-5 725 MHz doit se conformer à la limite de p.i.r.e.; le gain maximal d'antenne permis (pour les dispositifs utilisant la bande 5 725-5 825 MHz) doit se conformer à la limite de p.i.r.e. spécifiée pour l'exploitation point à point et non point à point, selon le cas.

This radio transmitter (IC: 7280B-3901M12B / Model: FWF-50G-DSL) has been approved by ISED to operate with the antenna types listed below with the maximum permissible gain and required antenna impedance for each antenna type indicated. Antenna types not included in this list, having a gain greater than the maximum gain indicated for that type, are strictly prohibited for use with this device.

Le présent émetteur radio (IC: 7280B-3901M12B / Model: FWF-50G-DSL) a été approuvé par ISED pour fonctionner avec les types d'antenne énumérés ci-dessous et ayant un gain admissible maximal et l'impédance requise pour chaque type d'antenne. Les types d'antenne non inclus dans cette liste, ou dont le gain est supérieur au gain maximal indiqué, sont strictement interdits pour l'exploitation de l'émetteur.

This device and it's antennas(s) must not be co-located or operating in conjunction with any other antenna or transmitter except in accordance with IC multi-transmitter product procedures.

Cet appareil et son antenne (s) ne doit pas être co-localisés ou fonctionnement en association avec une autre antenne ou transmetteur.

Antenna No.	Manufacturer	Model	Antenna Type	Connector	Antenna Peak Gain
1	Speed	F-0Q-FS-6156-001-00	Dipole	SMA	0.31 dBi for 2.4GHz(WLAN) 2.54 dBi for 5GHz
2	Speed	F-0Q-FS-6156-001-00	Dipole	SMA	0.31 dBi for 2.4GHz(WLAN) 2.54 dBi for 5GHz
3	Speed	F-0Q-FS-6156-001-00	Dipole	SMA	0.31 dBi for 2.4GHz(WLAN) 2.54 dBi for 5GHz
4	Joymax	IHF-2120MPX9-W018	Monopole	iPex MHF1	1.53 dBi for 2.4GHz(BLE)

IMPORTANT: The device must be professionally installed and must use the supplied antenna.

Professional Installation Instruction

1. Installation personnel
   This product is designed for specific application and needs to be installed by qualified personnel who has RF and related rule knowledge. The general user shall not attempt to install or change the settings.

2. Installation location
   The product shall be installed at a location where the radiating antenna can be kept 20cm from nearby person in normal operation condition to meet Regulatory RF exposure requirement. The installation applies to indoor location.

3. External antenna(s)
   Use only the antenna(s) that have been approved by the manufacturer. The non-approved antenna(s) may produce unwanted spurious or excessive RF transmitting power that may lead to the violation of FCC/ISED limit and is prohibited.

4. Warning
   Please carefully select the installation position and ensure that the final output power does not exceed the limit set forth in relevant rules. The violation of the rule could lead to serious federal penalty.

Instructions d'installation professionnelle

1. Installation
   Ce produit est conçu pour un usage spécifique et doit être installé par un personnel qualifié maîtrisant les radiofréquences et règle similaires. L'utilisateur ne doit pas tenter d'installer ou de modifier les paramètres.

2. Emplacement d'installation
   En usage normal, afin de respecter les exigences réglementaires concernant l'exposition aux radiofréquences, ce produit doit être installe de façon à respecter une distance de 20cm entre l'antenne émettrice et. L'installation s'applique aux emplacements intérieur.

3. Antenne externe (s)
   Utiliser uniquement l'antenne (s) approuvées par le fabricant. L'utilisation d'autres antennes peut conduire à un niveau de rayonnement essentiel ou non essentiel dépassant les niveaux limites définis par FCC/ISED, ce qui est interdit.

4. Avertissement
   Choisir avec soin la position d'installation et s'assurer que la puissance de sortie ne dépasse pas les limites en vigueur. La violation de cette règle peut conduire à de sérieuses pénalités fédérales

NOTICE: This product meets the applicable Industry Canada terminal technical specifications. This is confirmed by the registration number. The abbreviation, IC, before the registration number signifies that registration was performed based on a Declaration of Conformity indicating that Industry Canada technical specifications were met. It does not guarantee the equipment will operate to the user's satisfaction.

AVIS: Ce produit est conforme aux spécifications techniques terminales applicables d'Industrie Canada. Cette conformité est confirmée par le numéro d'enregistrement. Le sigle IC, placé devant le numéro d'enregistrement, signifie que l'enregistrement s'est effectué conformément à une déclaration de conformité et indique quelles spécifications techniques d'Industrie Canada ont été respectées. Il ne garantit pas que le matériel fonctionnera à la satisfaction de l'utilisateur.

NOTICE: The Ringer Equivalence Number (REN) for this terminal equipment is 0.1. The REN assigned to each terminal equipment provides an indication of the maximum number of terminals allowed to be connected to a telephone interface. The termination on an interface may consist of any combination of devices subject only to the requirement that the sum of the Ringer Equivalence Numbers of all the devices does not exceed five.

AVIS: L'indice d'équivalence de la sonnerie (IES) du présent matériel est de 0.1. L'IES assigné à chaque dispositif terminal indique le nombre maximal de terminaux qui peuvent être reliés à une interface téléphonique. La terminaison d'une interface peut consister en une combinaison quelconque de dispositifs, à la seule condition que la somme d'indices d'équivalence de la sonnerie de tous les dispositifs n'excède pas 5.

European Conformity (CE) - EU

This is a Class B product. In a domestic environment, this product may cause radio interference, in which case the user may be required to take adequate measures.

CE

This equipment should be installed and operated with minimum distance 20cm between the radiator and your body.

Simplified EU Declaration of Conformity

This declaration is only valid for Fortinet products (including combinations of software, firmware and hardware) provided by Fortinet or Fortinet's authorized partners to the end-customer directly for use within the EU or countries that have implemented the EU Directives and/or spectrum regulation. Any Fortinet products not obtained directly from Fortinet or Fortinet's authorized partners may not comply with EU Directives and Fortinet makes no assurances for such products.

Български
Този продукт е в съответствие с Директива 2014/53/ЕС.

Česky
Tento produkt je v souladu se směrnicí 2014/53/EU.

Dansk
Dette produkt er i overensstemmelse med direktiv 2014/53/EU.

Deutsch
Dieses Produkt entspricht der Richtlinie 2014/53/EU.

Eesti
See toode vastab direktiivile 2014/53/EL.

English
This product is in compliance with Directive 2014/53/EU.

Español
Este producto cumple con la Directiva 2014/53/UE.

Ελληνική
Το προϊόν αυτό συμμορφώνεται με την Οδηγία 2014/53/ΕΕ.

Français
Ce produit est conforme à la Directive 2014/53/UE.

Hrvatski
Ovaj proizvod je u skladu s Direktivom 2014/53/EU.

Italiano
Questo prodotto è conforme alla Direttiva 2014/53/EU.

Latviski
Šis produkts atbilst Direktīvai 2014/53/ES.

Lietuvių
Šis gaminys atitinka direktyvą 2014/53/ES.

Malti
Dan il-prodott huwa konformi mad-Direttiva 2014/53/UE.

Magyar
Ez a termék megfelel a 2014/53/EU irányelvnek.

Nederlands
Dit product is in overeenstemming met Richtlijn 2014/53/EU.

Norsk
Dette produktet er i samsvar med direktiv 2014/53/EU.

Polski
Ten produkt jest zgodny z dyrektywą 2014/53/UE.

Português
Este produto está em conformidade com a Diretiva 2014/53/UE.

Rumunski
Acest produs este în conformitate cu Directiva 2014/53/UE.

Slovensky
Tento produkt je v súlade so smernicou 2014/53/EÚ.

Slovensko
Ta izdelek je v skladu z Direktivo 2014/53/EU.

Suomi
Tämä tuote on direktiivin 2014/53/EU mukainen.

Svenska
Denna produkt överensstämmer med direktiv 2014/53/EU.

Note: The full Declaration of Conformity for this product is available in the link below:
https://site.fortinet.com/ProductRegulatory/EU

The device is restricted to indoor use only when operating in the 5150 to 5350 MHz frequency range in the following countries:

	AT	BE	BG	HR	CY	CZ	DK
	EE	FI	FR	DE	EL	HU	IE
	IT	LV	LT	LU	MT	NL	PL
	PT	RO	SK	SI	ES	SE	

Compliance with 2014/53/EU Radio Equipment Directive (RED)

In accordance with Article 10.8(a) and 10.8(b) of the RED, the following table provides information on the frequency bands used and the maximum RF transmit power of the product for sale in the EU:

STANDARD	FREQUENCY RANGE	TRANSMIT POWER
Bluetooth	2402-2480MHz	Less than 10dBm (EIRP)
WLAN	2412-2472MHz	Less than 20dBm (EIRP)
	5180-5240MHz	Less than 23dBm (EIRP)
	5260-5320MHz	Less than 23dBm (EIRP) *
	5500-5700MHz	Less than 30dBm (EIRP) *
	5745-5825MHz	Less than 14dBm (EIRP)

Note: * Only with DFS bands certification

UK Conformity Assessed (UKCA) – United Kingdom

The product transmits within the frequency ranges and less than or equal to the power listed below:

STANDARD	FREQUENCY RANGE	TRANSMIT POWER
Bluetooth	2402-2480MHz	Less than 10dBm (EIRP)
WLAN	2412-2472MHz	Less than 20dBm (EIRP)
	5180-5240MHz	Less than 23dBm (EIRP)
	5260-5320MHz	Less than 23dBm (EIRP) *
	5500-5700MHz	Less than 30dBm (EIRP) *
	5745-5825MHz	Less than 14dBm (EIRP)

Note: * Only with DFS bands certification

This equipment should be installed and operated with minimum distance 20cm between the radiator & your body.

This product is in compliance with **Statutory Instrument 1206 Radio Equipment Regulations 2017**

The full Declaration of Conformity for this product is available in the link below:
https://site.fortinet.com/ProductRegulatory/UK

The device is restricted to indoor use only when operating in the 5150 to 5350 MHz frequency range in the following countries:

	UK (NI)

April 30, 2025

Copyright © 2025 Fortinet, Inc. All rights reserved. Fortinet®, FortiGate®, FortiCare® and FortiGuard®, and certain other marks are registered trademarks of Fortinet, Inc., and other Fortinet names herein may also be registered and/or common law trademarks of Fortinet. All other product or company names may be trademarks of their respective owners. Performance and other metrics contained herein were attained in internal lab tests under ideal conditions, and actual performance and other results may vary. Network variables, different network environments and other conditions may affect performance results. Nothing herein represents any binding commitment by Fortinet, and Fortinet disclaims all warranties, whether express or implied, except to the extent Fortinet enters a binding written contract, signed by Fortinet's SVP Legal and above, with a purchaser that expressly warrants that the identified product will perform according to certain expressly-identified performance metrics and, in such event, only the specific performance metrics expressly identified in such binding written contract shall be binding on Fortinet. For absolute clarity, any such warranty will be limited to performance in the same ideal conditions as in Fortinet's internal lab tests. Fortinet disclaims in full any covenants, representations, and guarantees pursuant hereto, whether express or implied. Fortinet reserves the right to change, modify, transfer, or otherwise revise this publication without notice, and the most current version of the publication shall be applicable.

For Product License Agreement / EULA and Warranty Terms, visit https://www.fortinet.com/content/dam/fortinet/assets/legal/EULA.pdf

FWF-50G-DSL-QSG-20250430

FSC www.fsc.org MIX Paper FSC™ C173973