FortiSwitch 124E Series

QuickStart Guide

November 22, 2021

11-360-449447-20211122

Copyright© 2018 Fortinet, Inc. All rights reserved. Fortinet®, FortiGate®, FortiCare® and FortiGuard®, and certain other marks are registered trademarks of Fortinet, Inc., in the U.S. and other jurisdictions, and other Fortinet names herein may also be registered and/or common law trademarks of Fortinet. All other product or company names may be trademarks of their respective owners. Performance and other metrics contained herein were attained in internal lab tests under ideal conditions, and actual performance and other results may vary. Network variables, different network environments and other conditions may affect performance results. Nothing herein represents any binding commitment by Fortinet, and Fortinet disclaims all warranties, whether express or implied, except to the extent Fortinet enters a binding written contract, signed by Fortinet's General Counsel, with a purchaser that expressly warrants that the identified product will perform according to certain expressly-identified performance metrics and, in such event, only the specific performance metrics expressly identified in such binding written contract shall be binding on Fortinet. For absolute clarity, any such warranty will be limited to performance in the same ideal conditions as in Fortinet's internal lab tests. In no event does Fortinet make any commitment related to future deliverables, features or development, and circumstances may change such that any forward-looking statements herein are not accurate. Fortinet disclaims in full any covenants, representations, and guarantees pursuant hereto, whether express or implied. Fortinet reserves the right to change, modify, transfer, or otherwise revise this publication without notice, and the most current version of the publication shall be applicable.

Register for Support

Register your Fortinet product to receive:
- Technical Support
- New product features
- Protection from new threats

Vous devez enregistrer le produit pour recevoir:
- Support technique
- Nouvelles fonctionnalitées du produit
- Protection contre de nouvelles menaces

La reistrazione ti permette di usufruire di:
- Supporto Tecnico
- Nuove funzionalita
- Proteezione dalle ultime minaccce

Debe registrar el producto para recibir:
- Apoyo técnico
- Nuevas funcionalidades del producto
- Protección contra ataques

登録のお願い
本日、フォーティネット製品の登録をしてください。
登録すると次のメリットがあります。
テクニカルサポート • 新機能の追加 • 新しい脅威への防御

请马上注册
您的飞塔产品
您在注册以后才能得到技术支持、新产品特点信息、最新威胁防护

https://support.fortinet.com
Toll free: 1 866 648 4638
Phone: 1 408 486 7899
Fax: 1 408 235 7737
Email: register@fortinet.com

Box Includes

FortiSwitch 124E Series

QuickStart Guide

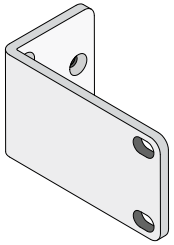

2 Rack Mount Brackets
(FS-124E only)

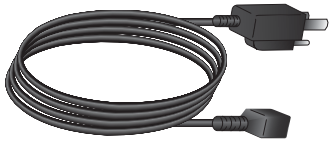

Power Cable

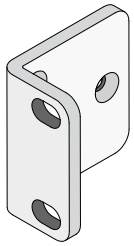

2 Rack Mount Brackets
(FS-124E-POE & FS-124E-FPOE only)

Console Cable

6 Bracket Screws

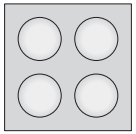

4 Rubber Feet

1 Installation

The FortiSwitch unit can be placed on any flat surface, or mounted in any standard 19 inch rack unit with the provided rack-mount brackets and screws.

Please read "Cautions and Warnings" *prior to installing your device.*

Caution: Electrostatic discharge (ESD) can damage your Fortinet equipment.

Do not place heavy objects on the unit.

To avoid personal injury or damage to the unit, it is recommended that two or more people install the unit into the rack.

Note: If the unit has a redundant power supply, each power cable should be connected to a different power source. In this way, if one power source fails, the other may still be operational and the unit will not lose power.

To install the FortiSwitch unit into a rack

1. Ensure that the FortiSwitch unit is placed on a stable surface prior to rack-mount installation.
2. Attach the provided rack-mount brackets to the sides of the unit using the provided bracket screws.

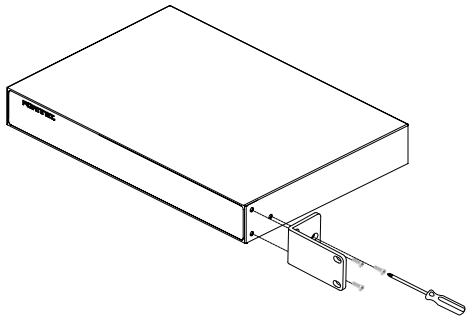

3. Position the FortiSwitch unit in the rack. Ensure there is enough room around the unit to allow for sufficient air flow.
4. Line up the rack-mount bracket holes to the holes on the rack and ensure that the FortiSwitch unit is level.

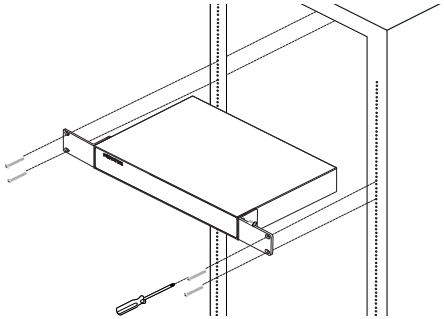

5. Finger tighten four rack-mount screws to attach the unit to the rack.
6. Verify that the spacing around the FortiSwitch unit conforms to requirements and that the unit is level, then tighten the rack-mount screws with an appropriate screwdriver.
7. Plug the provided power cable into the rear of the unit and then into a grounded electrical outlet or a separate power source, such as an uninterruptible power supply (UPS) or a power distribution unit (PDU).

To install the unit on a flat surface

1. Ensure that the surface onto which the FortiSwitch unit to be installed is clean, level, and stable and that there is at least 1.5in (3.8cm) of clearance on all sides to allow for adequate airflow.
2. Attach the provided rubber feet to the bottom of the FortiSwitch unit.
3. Place the unit in the designated location.
4. Verify that the spacing around the FortiSwitch unit conforms to requirements and that the unit is level.

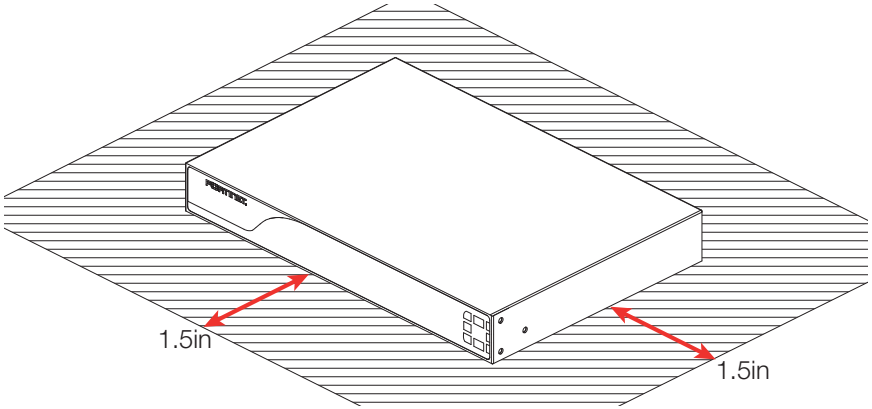

5. Plug the provided power cable into the rear of the unit and then into a grounded electrical outlet or a separate power source, such as an uninterruptible power supply (UPS) or a power distribution unit (PDU).

2 Basic Connections

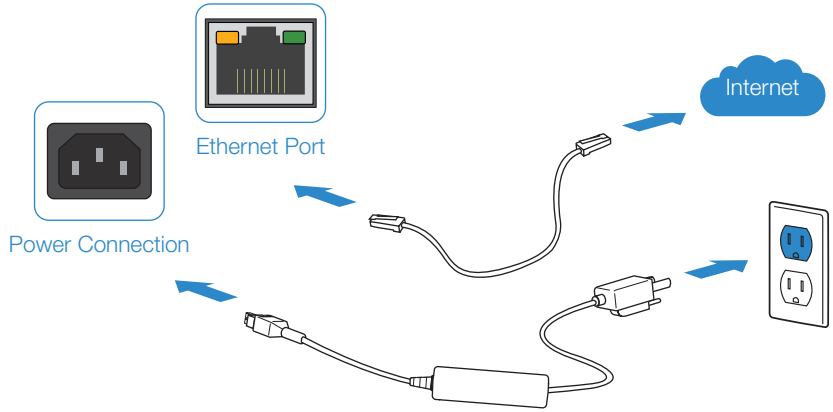

Connect your device to a power outlet and an Internet connection. This is usually a modem, but could also be another device on your network.

3 Setup Options

Web Browser

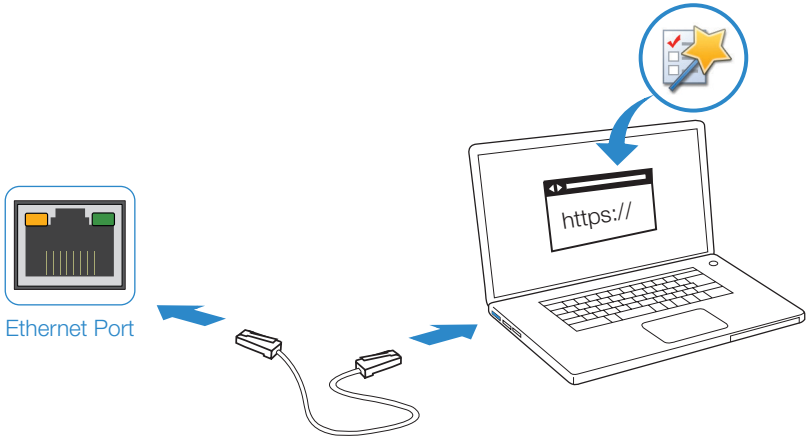

To Connect to the GUI

1. Connect the Ethernet cable.
2. Configure the management computer to be on the same subnet as the internal interface as the FortiSwitch unit:

   IP address: 192.168.1.2
   Netmask: 255.255.255.0

3. Visit 192.168.1.99 in your web browser.
4. Login using username "admin" and no password.
5. Configure your device and save your settings.
6. Register your device from the dashboard page.

Terminal Emulation

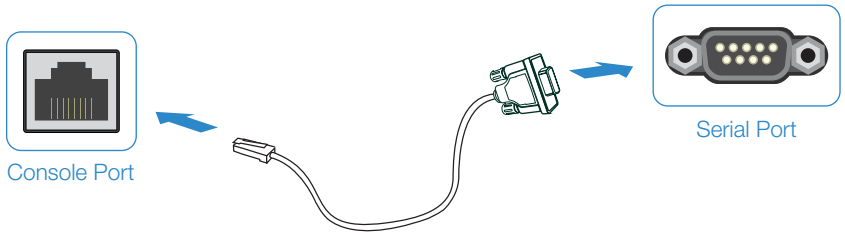

To Connect to the CLI

1. Connect the device's console port to the management computer using the provided console cable.
2. Start a terminal emulation program on the management computer, select the COM port, and use the following settings:

   Baud Rate: 115200
   Data bits: 8
   Parity: None
   Stop bits: 1
   Flow Control: None

3. Press Enter on your keyboard to connect to the CLI.
4. Login using username "admin" and no password. You can now proceed with configuring your device.

   Get started by typing "?" for a list of available commands.

   Begin typing a command then type "?" for a list of available ways to complete. For example "config ?" will show the lowest level of configuration options.

FortiLink

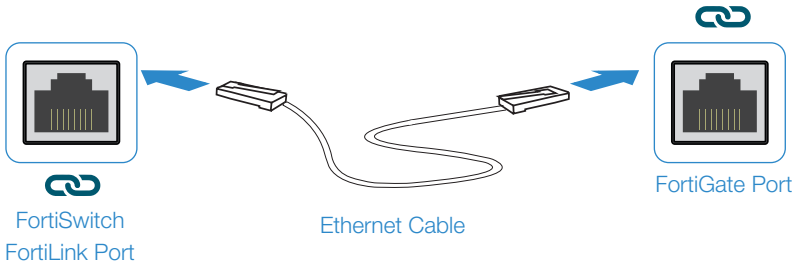

1. Connect a FortiSwitch FortiLink Port directly using an Ethernet Cable to a FortiGate FortiLink Port or any FortiGate Port that is not an HA port

2. Login to the FortiGate and go to the WiFi & Switch Controller --> FortiLink Interface

3. Add a FortiGate Port in the FortiLink interface and choose Automatically authorize devices

4. When the FortiSwitch is online in the WiFi & Switch Controller --> Managed FortiSwitch section, you can now manage your FortiSwitch

Cloud Management (Connect a port to the Internet)

1. Visit support.fortinet.com to register your device and cloud management license

2. Sign in at https://fortilan.forticloud.com to manage your Inventory List

FortiSwitch 124E

Console Port (RJ-45)
Optional connection to the management computer
Provides access to the CLI

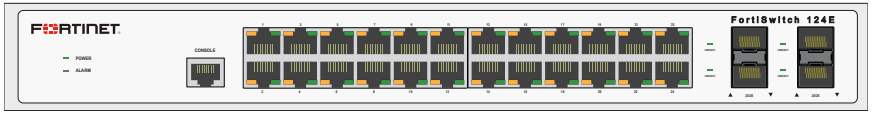

Ethernet Ports 1 - 24 (RJ-45)
Gigabit Ethernet network connections

SFP Ports 25 - 28
1Gbps small form-factor pluggable transceiver ports without bypass function

Grounding Screw
Provides extra grounding

Power
100-240V AC, 50/60Hz, 1A Max

SFP Ports
- Green: Connected
- Flashing Green: Transmitting & receiving
- Off: No link established

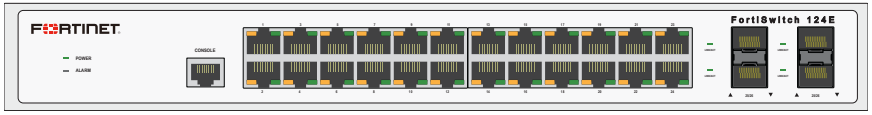

Ethernet Ports Link/Activity (Left)
- Amber: Connected at 100Mbps
- Flashing Amber: Transmitting & receiving data at 100Mbps
- Off: No 100Mbps link established

Ethernet Ports Link/Activity (Right)
- Green: Connected at 1Gbps
- Flashing Green: Transmitting & receiving data at 1Gbps
- Off: No Gbps link established

Power
- Green: The unit is on
- Off: The unit is off

Alarm
- Amber: The unit has a fault
- Off: No faults detected

FortiSwitch 124E-POE

Console Port (RJ-45)
Optional connection to the management computer
Provides access to the CLI

Ethernet Ports 13 - 24 (RJ-45)
Gigabit Ethernet ports

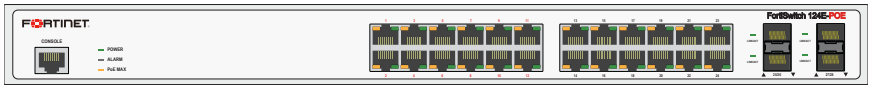

Ethernet Ports 1 - 12 (RJ-45)
Gigabit Ethernet ports with smart Power over Ethernet (PoE) providing up to a maximum of 185W for all ports

SFP Ports 25 - 28
1Gbps small form-factor pluggable transceiver ports without bypass function

Power
100-240V AC, 50/60Hz, 3A Max

Grounding Screw
Provides extra grounding

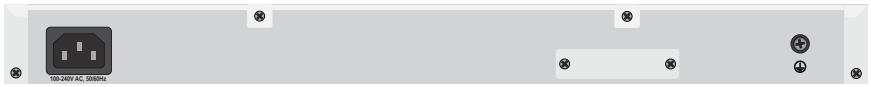

Ethernet Ports Link/Activity (Right)
- Green: Connected at 1Gbps or 100Mbps
- Flashing Green: Transmitting & receiving data
- Off: No link established

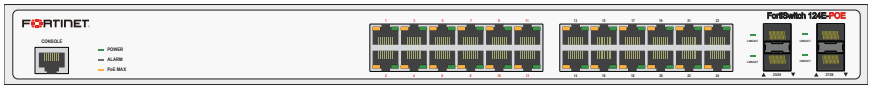

PoE Ports Power (Left)
- Amber: PoE output
- Off: No PoE output

PoE Ports Link/Activity (Right)
- Green: Connected at 1Gbps or 100Mbps
- Flashing Green: Transmitting & receiving data
- Off: No link established

Power
- Green: The unit is on
- Off: The unit is off

Alarm
- Amber: The unit has a fault
- Off: No faults detected

PoE Max
- Amber: Maximum PSE output reached
- Off: PSE output below maximum

SFP Ports
- Green: Connected
- Flashing Green: Transmitting & receiving
- Off: No link established

FortiSwitch 124E-FPOE

Console Port (RJ-45)
Optional connection to the management computer
Provides access to the CLI

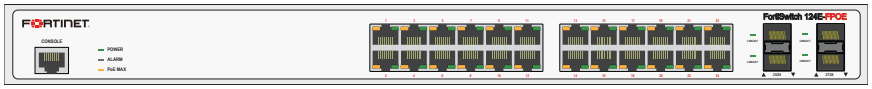

Ethernet Ports 1 - 24 (RJ-45)
Gigabit Ethernet ports with smart Power over Ethernet (PoE) providing up to a maximum of 370W for all ports

SFP Ports 25 - 28
1Gbps small form-factor pluggable transceiver ports without bypass function

Power
100-240V AC, 50/60Hz, 6A Max

Grounding Screw
Provides extra grounding

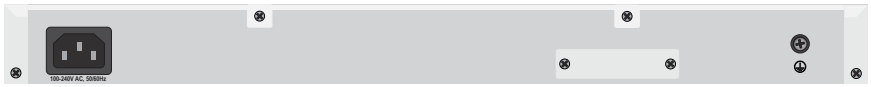

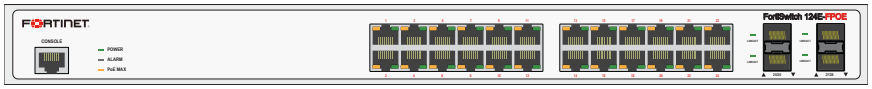

PoE Ports Power (Left)
- Amber: PoE output
- Off: No PoE output

PoE Ports Link/Activity (Right)
- Green: Connected at 1Gbps or 100Mbps
- Flashing Green: Transmitting & receiving data
- Off: No link established

Power
- Green: The unit is on
- Off: The unit is off

Alarm
- Amber: The unit has a fault
- Off: No faults detected

PoE Max
- Amber: Maximum PSE output reached
- Off: PSE output below maximum

SFP Ports
- Green: Connected
- Flashing Green: Transmitting & receiving
- Off: No link established

SFP Transceivers

Caution: SFP transceivers are static sensitive devices. Use an ESD wrist strap or similar grounding device when handling transceivers.

Do not force the SFP transceivers into the cage slots. If the transceiver does not easily slide in and click into place, it may not be aligned correctly or may be upside down. If this happens, remove the SFP transceiver, realign it or rotate it and slide it in again.

Note: Installing and removing SFP transceivers can shorten their useful life. Do not install or remove transceivers more than is necessary.

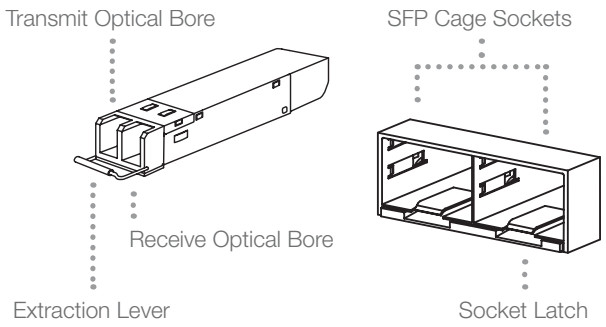

To install the SFP transceivers

1. Ensure that you are properly grounded.
2. Remove the caps from the SFP cage sockets on the front panel of the unit.
3. Position the SFP transceiver in front of the cage socket opening and ensure that the transceiver is correctly oriented. When the transceiver is correctly oriented, the extraction lever will be level with the socket latch.
   Note: SFP cage socket orientation may vary. Ensure that the SFP transceiver module is correctly oriented each time that you are inserting a transceiver.
4. Hold the sides of the SFP transceiver and slide it into the cage socket until it clicks into place.

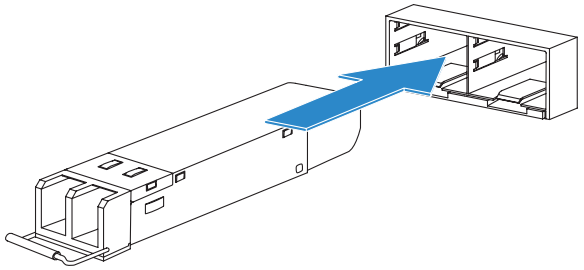

5. Press the transceiver firmly into the cage socket with your thumb.
6. Verify that the transceiver is latched correctly by grasping the sides of the transceiver and trying to pull it out without lowering the extraction lever.
   If the transceiver cannot be removed, it is installed and latched correctly.
   If the transceiver can be removed, reinsert it and press harder with your thumb.
   If necessary, repeat this process until the transceiver is securely latched into the cage socket.

To remove the SFP transceivers

1. Ensure that you are properly grounded.
2. If applicable, disconnect the fiber-optic cable from the transceiver connector and install a clean dust plug in the transceiver's optical bores.
3. Pull the extraction lever out and down to eject the transceiver. If you are unable to use your finger to open the lever, use a small flat-head screwdriver or other similar tool to open the lever.

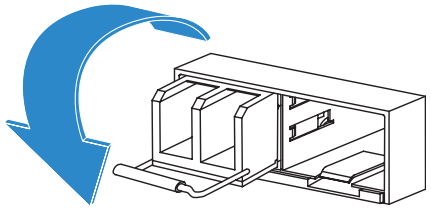

4. Hold the sides of the transceiver and carefully pull it away from the cage socket.

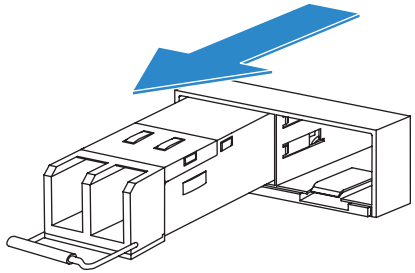

5. Replace the cap on the SFP cage socket and place the removed SFP transceiver into an antistatic bag.

Caution: Do not install or remove SFP transceivers while fiber-optic cables are still attached. This can cause damage to the cables, cable connectors, and the optical interfaces. It may also prevent the transceiver from latching correctly into the socket connector.

Note: Follow proper fiber-optic handling procedures when installing and removing SFP transceivers to ensure the devices remain clean and are not damaged.

Cautions and Warnings

Environmental Specifications

Ambient operating temperature: 0C to 40C

Rack Mount Instructions - The following or similar rack-mount instructions are included with the installation instructions:
Instructions de montage en rack - Les instructions de montage en rack suivantes ou similaires sont incluses avec les instructions d'installation:

Elevated Operating Ambient - If installed in a closed or multi-unit rack assembly, the operating ambient temperature of the rack environment may be greater than room ambient. Therefore, consideration should be given to installing the equipment in an environment compatible with the maximum ambient temperature (Tma) specified by the manufacturer.
Température ambiante élevée – S'il est installé dans un rack fermé ou à unités multiples, la température ambiante de fonctionnement de l'environnement du rack peut être supérieure à la température ambiante de la pièce. Par conséquent, il est important d'installer le matériel dans un environnement respectant la température ambiante maximale (Tma) stipulée par le fabricant.

Reduced Air Flow - Installation of the equipment in a rack should be such that the amount of air flow required for safe operation of the equipment is not compromised.
Ventilation réduite – Installation de l'équipement dans un rack doit être telle que la quantité de flux d'air nécessaire au bon fonctionnement de l'équipement n'est pas compromise.

Mechanical Loading - Mounting of the equipment in the rack should be such that a hazardous condition is not achieved due to uneven mechanical loading.
Chargement Mécanique – Montage de l'équipement dans le rack doit être telle qu'une situation dangereuse n'est pas lié à un chargement mécanique inégal.

Circuit Overloading - Consideration should be given to the connection of the equipment to the supply circuit and the effect that overloading of the circuits might have on overcurrent protection and supply wiring. Appropriate consideration of equipment nameplate ratings should be used when addressing this concern.
Surtension – Il convient de prendre l'ensemble des précautions nécessaires lors du branchement de l'équipement au circuit d'alimentation et être particulièrement attentif aux effets de la suralimentation sur le dispositif assurant une protection contre les courts-circuits et le câblage. Ainsi, il est recommandé de tenir compte du numéro d'identification de l'équipement.

Reliable Earthing - Reliable earthing of rack-mounted equipment should be maintained. Particular attention should be given to supply connections other than direct connections to the branch circuit (e.g. use of power strips).
Fiabilité de la mise à la terre– Fiabilité de la mise à la terre de l'équipement monté en rack doit être maintenue. Une attention particulière devrait être accordée aux connexions d'alimentation autres que les connexions directes au circuit de dérivation (par exemple de l'utilisation de bandes de puissance).

Refer to specific Product Model Data Sheet for Environmental Specifications (Operating Temperature, Storage Temperature, Humidity, and Altitude)
Référez à la Fiche Technique de ce produit pour les caractéristiques environnementales (Température de fonctionnement, température de stockage, humidité et l'altitude).

Safety

Caution: This equipment is to be used in a Network Environment 0 per IECTR 62101. This product is connected only to PoE networks without routing to the outside plant.

Attention: Ce matériel doit être utilisé dans un Environnement Réseau 0 par IECTR 62101. Ce produit est uniquement connecté aux réseaux PoE sans installation externe de routage.

CAUTION: Shock Hazard. Disconnect all power sources.
ATTENTION: Risque d'électrocution. Débranchez toutes les sources d'alimentation

Battery – Risk of explosion if the battery is replaced by an incorrect type. Do not dispose of batteries in a fire. They may explode. Dispose of used batteries according to your local regulations. IMPORTANT: Switzerland: Annex 4.10 of SR814.013 applies to batteries.
Batterie – Risque d'explosion si vous remplacez la batterie par un modèle incompatible. Jetez les piles usagées selon les réglementations locales en vigueur. IMPORTANT: Suisse: Annexe 4.10 de SR814.013 s'appliquant aux batteries.

警告
本電池如果更換不正確會有爆炸的危險請依製造商說明書處理用過之電池

Grounding — To prevent damage to your equipment, connections that enter from outside the building should pass through a lightning / surge protector, and be properly grounded. Use an electrostatic discharge workstation (ESD) and/or wear an anti-static wrist strap while you work. In addition to the grounding terminal of the plug, on the back panel, there is another, separate terminal for earthing.

Mise à la terre — Pour éviter d'endommager votre matériel, assurez-vous que les branchements qui entrent à partir de l'extérieur du bâtiment passent par un parafoudre / parasurtenseur et sont correctement mis à la terre. Utilisez un poste de travail de décharge électrostatique (ESD) et / ou portez un bracelet anti-statique lorsque vous travaillez. Ce produit possède une borne de mise à la terre qui est prévu à l'arrière du produit, à ceci s'ajoute la mise à la terre de la prise.

This product has a separate protective earthing terminal provided on the back of the product in addition to the grounding terminal of the attachment plug. This separate protective earthing terminal must be permanently connected to earth with a green with yellow stripe conductor minimum size # 14 AWG and the connection is to be installed by a qualified service personnel.

Ce produit a une borne de mise à la terre séparé sur le dos de l'appareil, en plus de la borne de mise à la terre de la fiche de raccordement. Cette borne de mise à la terre séparée doit être connecté en permanence à la terre avec un conducteur vert avec la taille bande jaune de minimum # 14 AWG et la connexion doit être installé par un personnel qualifié.

Regulatory Compliance

Federal Communication Commission (FCC) – USA

This device complies with Part 15 of FCC Rules. Operation is subject to the following two conditions:
(1) this device may not cause harmful interference, and
(2) this device must accept any interference received; including interference that may cause undesired operation.

This equipment has been tested and found to comply with the limits for a Class A digital device, pursuant to Part 15 of the FCC Rules. These limits are designed to provide reasonable protection against harmful interference when the equipment is operated in a commercial environment. This equipment generates, uses, and can radiate radio frequency energy, and if it is not installed and used in accordance with the instruction manual, it may cause harmful interference to radio communications. Operation of this equipment in a residential area is likely to cause harmful interference, in which case the user will be required to correct the interference at his own expense.

WARNING: Any changes or modifications to this product not expressly approved by the party responsible for compliance could void the user's authority to operate the equipment

Industry Canada Equipment Standard for Digital Equipment (ICES) – Canada

CAN ICES-003 (A) / NMB-003 (A)

This digital apparatus does not exceed the Class A limits for radio noise emissions from digital apparatus set out in the Radio Interference Regula¬tions of the Canadian Department of Communications.

Cet appareil numérique n'émet pas de bruits radioélectriques dépassant les limites applicables aux appareils numériques de la classe A prescrites dans le Règlement sur le brouillage radioélectrique édicte par le ministère des Communications du Canada.

European Conformity (CE) - EU

This is a Class A product. In a domestic environment, this product may cause radio interference, in which case the user may be required to take adequate measures.

Voluntary Control Council for Interference (VCCI) – Japan

この装置は、クラスＡ機器です。この装置を住宅環境で使用すると電波妨害を引き起こすことがあります。この場合には使用者が適切な対策を講ずるよう要求されることがあります。 ＶＣＣＩ－Ａ

Product Safety Electrical Appliance & Material (PSE) – Japan

日本では電気用品安全法(PSE)の規定により、同梱している電源コードは本製品の専用電源コードとして利用し、他の製品に使用しないでください。

Bureau of Standards Metrology and Inspection (BSMI) – Taiwan

這是甲類的資訊產品，在居住的環境中使用時，可能會造成射頻干擾，在這種情況下，使用者會被要求採取某些適當的對策。

The presence conditions of the restricted substance (BSMI RoHS table) are available at the link below: https://www.fortinet.com/bsmi

China

此为A级产品，在生活环境中，该产品可能会造成无线电干扰。这种情况下，可能需要用户对其采取切实可行的措施。

Agência Nacional de Telecomunicações (ANATEL) – Brazil

Este produto não é apropriado para uso em ambientes domésticos, pois poderá causar interferências eletromagnéticas que obrigam o usuário a tomar medidas necessárias para minimizar estas interferências."

Para maiores informações, consulte o site da ANATEL www.anatel.gov.br

Korea Certification (KC) – Korea

A급 기기 (업무용 방송통신기자재)
이 기기는 업무용(A급) 전자파적합기기로서 판매자 또는 사용자는 이 점을 주의하시기를 바라며, 가정외의 지역에서 사용하는 것을 목적으로 합니다.

Fortinet Product License Agreement / EULA and Warranty Terms

Trademarks and Copyright Statement

Fortinet®, FortiGate®, and FortiGuard® are registered trademarks of Fortinet, Inc., and other Fortinet names may also be trademarks, registered or otherwise, of Fortinet. All other product or company names may be trademarks of their respective owners. Copyright © 2017 Fortinet, Inc., All Rights reserved. Contents and terms are subject to change by Fortinet without prior notice. No part of this publication may be reproduced in any form or by any means or used to make any derivative such as translation, transformation, or adaptation without permission from Fortinet, Inc., as stipulated by the United States Copyright Act of 1976.

Product License Agreement

The parties to this agreement are you, the end customer, and either (i) where you have purchased your Product within the Americas, Fortinet, Inc., or (ii) where you have purchased your Product outside of the Americas, Fortinet Singapore Private Limited (each referred to herein as "Fortinet"). CAREFULLY READ THE FOLLOWING LEGAL AGREEMENT (THE OR THIS "AGREEMENT" OR "EULA"). USE OR INSTALLATION OF FORTINET PRODUCT(S) AND ANY UPDATES THERETO, INCLUDING HARDWARE APPLIANCE PRODUCTS, SOFTWARE AND FIRMWARE INCLUDED THEREIN BY FORTINET, AND STAND-ALONE SOFTWARE PRODUCTS SOLD BY FORTINET (TOGETHER, THE "PRODUCTS") CONSTITUTES ACCEPTANCE BY YOU OF THE TERMS IN THIS AGREEMENT, AS AMENDED OR UPDATED FROM TIME TO TIME IN FORTINET'S DISCRETION BY FORTINET PUBLISHING AN AMENDED OR UPDATED VERSION. FORTINET SHALL NOT BE BOUND BY ANY ADDITIONAL AND/OR CONFLICTING PROVISIONS IN ANY ORDER, RELEASE, ACCEPTANCE OR OTHER WRITTEN CORRESPONDENCE OR OTHER WRITTEN OR VERBAL COMMUNICATION UNLESS EXPRESSLY AGREED TO IN A WRITING SIGNED BY THE GENERAL COUNSEL OF FORTINET. IF YOU DO NOT AGREE TO ALL OF THE TERMS OF THIS AGREEMENT, DO NOT START THE INSTALLATION PROCESS OR USE THE PRODUCTS. IF YOU DO NOT AGREE TO THE TERMS OF THIS AGREEMENT, YOU SHOULD IMMEDIATELY, AND IN NO EVENT LATER THAN FIVE (5) CALENDAR DAYS AFTER YOUR RECEIPT OF THE PRODUCT IMMEDIATELY NOTIFY THE FORTINET LEGAL TEAM IN WRITING AT LEGAL@FORTINET.COM OF REQUESTED CHANGES TO THIS AGREEMENT.

1. License Grant.

This is a license, not a sales agreement, between you and Fortinet. The term "Software", as used throughout this Agreement, includes all Fortinet and third party firmware and software provided to you with, or incorporated into, Fortinet appliances and any stand-alone software provided to you by Fortinet, with the exception of any open source software contained in Fortinet's Products which is discussed in detail in section 15 below, and the term "Software" includes any accompanying documentation, any updates and enhancements of the software or firmware provided to you by Fortinet, at its option. Fortinet grants to you a non-transferable (except as provided in section 5 ("Transfer") and section 15 ("Open Source Software") below), non-exclusive, revocable (in the event of your failure to comply with these terms or in the event Fortinet is not properly paid for the applicable Product) license to use the Software solely for your internal business purposes (provided, if a substantial portion of your business is to provide managed service provider services to your end-customers, you may use the Software embedded in FortiGate and supporting hardware appliances to provide those services, subject to the other restrictions in this Agreement), in accordance with the terms set forth in this Agreement and subject to any further restrictions in Fortinet documentation, and solely on the Fortinet appliance, or, in the case of blades, CPUs or databases, on the single blade, CPU or database on which Fortinet installed the Software or, for stand-alone Software, solely on a single computer running a validly licensed copy of the operating system for which the Software was designed unless and except set forth in the published documentation otherwise, or, in the case of blades, CPUs or databases, on a single blade, CPU or database. For clarity, notwithstanding anything to the contrary, all licenses of Software to be installed on blades, CPUs or databases are licensed on a per single blade, solely for one blade and not for multiple blades that may be installed in a chassis, per single CPU or per single database basis, as applicable. The Software is "in use" on any Fortinet appliances when it is loaded into temporary memory (i.e. RAM). You agree that, except for the limited, specific license rights granted in this section 1, you receive no license rights to the Software.

2. Limitation on Use.

You may not attempt to, and, if you are a corporation, you are responsible to prevent your employees and contractors from attempting to, (a) modify, translate, reverse engineer, decompile, disassemble, create derivative works based on, sublicense, or distribute the Software; (b) rent or lease any rights in the Software in any form to any third party or make the Software available or accessible to third parties in any other manner; (c) except as provided in section 5, transfer assign or sublicense right to any other person or entity, (d) remove any proprietary notice, labels, or marks on the Software, Products, and containers, or (e) use the Software for third-party training, commercial time-sharing or service bureau use or use the Software to provide services to third parties except as expressly set forth in this Agreement.

3. Proprietary Rights.

All rights, title, interest, and all copyrights to the Software and any copy made thereof by you and to any Product remain with Fortinet. You acknowledge that no title to the intellectual property in the Software or other Products is transferred to you and you will not acquire any rights to the Software or other Products except for the specific license as expressly set forth in section 1 ("License Grant") above. You expressly agree and acknowledge that Fortinet owns and shall retain all intellectual property rights in and to, and you have no intellectual property rights in and to, the Products and the Software other than the License Grant. You agree to keep confidential all Fortinet confidential information and only to use such information for the purposes for which Fortinet disclosed it.

4. Term and Termination.

Except for evaluation and beta licenses or other licenses, such as subscription licenses, where the term of the license is limited per the evaluation/beta or other agreement, in the ordering documents or otherwise, the term of the license is for the duration of Fortinet's copyright in the Software. Fortinet may terminate this Agreement, and the licenses and other rights herein, immediately without notice if you breach or fail to comply with any of the terms and conditions of this Agreement or for other reasons as stated in Fortinet's other documentation. You agree that, upon such termination, you will cease using the Software and any Product and either destroy all copies of the Fortinet documentation or return all materials to Fortinet.

5. Transfer.

If you are a Fortinet contracted and authorized reseller or distributor of Products, you may transfer (not rent or lease unless specifically agreed to in writing by Fortinet) the Software to one end user on a permanent basis, provided that: (i) you ensure that your customer and the end user receives a copy of this Agreement, is bound by its terms and conditions, and, by selling the Product or Software, you hereby agree to enforce the terms in this Agreement against such end user, (ii) you at all times comply with all applicable United States export control laws and regulations, and (iii) you agree to refund any fees paid to you by an end user who purchased Product(s) from you but does not agree to the terms contained in this Agreement and therefore wishes to return the Product(s) as provided for in this Agreement. Further, if you are a non-authorized reseller of Products, you are not authorized to sell Product(s) or Software, but, regardless, by selling Product(s) or Software, you hereby agree you are bound by the restrictions and obligations herein and are bound to: (i) ensure that your customer and the end user receive a copy of this Agreement and are bound in full by all restrictions and obligations herein (ii) enforce the restrictions and obligations in this Agreement against such customer and/or end user, (iii) comply with all applicable United States export control laws and regulations and all other applicable laws, and (iv) refund any fees paid to you by a customer and/or end user who purchased Product(s) from you but does not agree to the restrictions and obligations contained in this Agreement and therefore wishes to return the Product(s) as provided for in this Agreement. Notwithstanding anything to the contrary, distributors, resellers and other Fortinet partners (a) are not agents of Fortinet and (b) are not authorized to bind Fortinet in any way.

6. Limited Warranty.

Fortinet provides this limited warranty for its product only to the single end-user person or entity that originally purchased the Product from Fortinet or its authorized reseller or distributor and paid for such Product. The warranty is only valid for Products which are properly registered on Fortinet's Support Website, https://support.fortinet.com, or such other website as provided by Fortinet, or for which the warranty otherwise starts according to Fortinet's policies. The warranty periods discussed below will start according to Fortinet's policies posted at http://www.fortinet.com/aboutus/legal.html or such other website as provided by Fortinet. It is the Fortinet distributor's and reseller's responsibility to make clear to the end user the date the product was originally shipped from Fortinet, and it is the end user's responsibility to understand the original ship date from the party from which the end user purchased the product. All warranty claims must be submitted in writing to Fortinet before the expiration of the warranty term or such claims are waived in full. Fortinet provides no warranty for any beta, donation or evaluation Products, for any spare parts not purchased directly from Fortinet by the end-user, for any accessories, or for any stand-alone software. Fortinet warrants that the hardware portion of the Products, including spare parts unless noted otherwise ("Hardware") will be free from material defects in workmanship as compared to the functional specifications for the period set forth as follows and applicable to the Product type ("Hardware Warranty Period"): a three hundred sixty-five (365) day limited warranty for the Hardware excluding spare parts, power supplies, and accessories (provided, solely with respect to FortiAP and Meru AP indoor Wi-Fi access point Hardware appliance products and FortiSwitch Hardware appliance products other than the FortiSwitch-5000 series (for both excluding spare parts, power supplies, and accessories), the warranty herein shall last from the start of the warranty period as discussed above until five (5) years following the product announced end-of-life date), and, for spare parts, power supplies, and accessories, solely a ninety (90) days limited warranty. Fortinet's sole obligation shall be to repair or offer replacement Hardware for the defective Hardware at no charge to the original owner. This obligation is exclusive of transport fees, labor, de-installation, installation, reconfiguration, or return shipment and handling fees and costs, and Fortinet shall have no obligation related thereto. Such repair or replacement will be rendered by Fortinet at an authorized Fortinet service facility as determined by Fortinet. The replacement Hardware need not be new or of an identical make, model, or part; Fortinet may, in its discretion, replace the defective Hardware (or any part thereof) with any reconditioned Product that Fortinet reasonably determines is substantially equivalent (or superior) in all material respects to the defective Hardware. The Hardware Warranty Period for the repaired or replacement Hardware shall be for the greater of the remaining Hardware Warranty Period or ninety days from the delivery of the repaired or replacement Hardware. If Fortinet determines in its reasonable discretion that a material defect is incapable of correction or that it is not practical to repair or replace defective Hardware, the price paid by the original purchaser for the defective Hardware will be refunded by Fortinet upon return to Fortinet of the defective Hardware. All Hardware (or part thereof) that is replaced by Fortinet, or for which the purchase price is refunded, shall become the property of Fortinet upon replacement or refund. Fortinet warrants that the software as initially shipped with the Hardware Products will substantially conform to Fortinet's then current functional specifications for the Software, as set forth in the applicable documentation for a period of ninety (90) days ("Software Warranty Period"), if the Software is properly installed on approved Hardware and operated as contemplated in its documentation. Fortinet's sole obligation shall be to repair or offer replacement Software for the non-conforming Software with software that substantially conforms to Fortinet's functional specifications. This obligation is exclusive of transport fees, labor, de-installation, installation, reconfiguration, or return shipment and handling fees and costs, and Fortinet shall have no obligation related thereto. Except as otherwise agreed by Fortinet in writing, the warranty replacement Software is provided only to the original licensee, and is subject to the terms and conditions of the license granted by Fortinet for the Software. The Software Warranty Period shall extend for an additional ninety (90) days after any warranty replacement software is delivered. If Fortinet determines in its reasonable discretion that a material non-conformance is incapable of correction or that it is not practical to repair or replace the non-conforming Software, the price paid by the original licensee for the non-conforming Software will be refunded by Fortinet; provided that the non-conforming Software (and all copies thereof) is first returned to Fortinet. The license granted respecting any Software for which a refund is given automatically terminates immediately upon refund. For purpose of the above hardware and software warranties, the term "functional specifications" means solely those specifications authorized and published by Fortinet that expressly state in such specifications that they are the functional specifications referred to in this section 6 of this Agreement, and, in the event no such specifications are provided to you with the Software or Hardware, there shall be no warranty on such Software.

7. Disclaimer of Other Warranties and Restrictions.

EXCEPT FOR THE LIMITED WARRANTY SPECIFIED IN SECTION 6 ABOVE, THE PRODUCT AND SOFTWARE ARE PROVIDED "AS-IS" WITHOUT ANY WARRANTY OF ANY KIND INCLUDING, WITHOUT LIMITATION, ANY IMPLIED WARRANTY, IMPLIED OR EXPRESS WARRANTY OF MERCHANTABILITY, OR WARRANTY FOR FITNESS FOR A PARTICULAR PURPOSE AND NON-IN-FRINGEMENT. IF ANY IMPLIED WARRANTY CANNOT BE DISCLAIMED IN ANY TERRITORY WHERE A PRODUCT IS SOLD, THE DURATION OF SUCH IMPLIED WARRANTY SHALL BE LIMITED TO NINETY (90) DAYS FROM THE DATE OF ORIGINAL SHIPMENT FROM FORTINET. EXCEPT AS EXPRESSLY COVERED UNDER THE LIMITED WARRANTY PROVIDED HEREIN, THE ENTIRE RISK AS TO THE QUALITY, SELECTION AND PERFORMANCE OF THE PRODUCT IS WITH THE PURCHASER OF THE PRODUCT. NOTWITHSTANDING ANYTHING TO THE CONTRARY, THE HARDWARE WARRANTY PERIOD DISCUSSED ABOVE DOES NOT APPLY TO CERTAIN FORTINET PRODUCTS, INCLUDING FORTITOKEN WHICH HAS A 365 DAY WARRANTY FROM THE DATE OF SHIPMENT FROM FORTINET'S FACILITIES, AND THE SOFTWARE WARRANTY DOES NOT APPLY TO CERTAIN FORTINET PRODUCTS, INCLUDING FORTIGATE-ONE AND VDOM SOFTWARE. YOU HEREBY ACKNOWLEDGE AND AGREE THAT NO VENDOR CAN ASSURE COMPLETE SECURITY AND NOTHING HEREIN OR ELSEWHERE SHALL BE DEEMED TO IMPLY A SECURITY GUARANTEE OR ASSURANCE.

The warranty in Section 6 above does not apply if the Software, Product or any other equipment upon which the Software is authorized to be used (a) has been altered, except by Fortinet or its authorized representative, (b) has not been installed, operated, repaired, updated to the latest version, or maintained in accordance with instructions supplied by Fortinet, (c) has been subjected to abnormal physical or electrical stress, misuse, negligence, or accident; (d) is licensed for beta, evaluation, donation, testing or demonstration purposes or for which Fortinet does not charge a purchase price or license fee. In the case of beta, testing, evaluation, donation or free Software or Product, the end user acknowledges and agrees that such Software or Product may contain bugs or errors and could cause system failures, data loss and other issues, and the end user agrees that such Software or Product is provided "as-is" without any warranty whatsoever, and Fortinet disclaims any warranty or liability whatsoever. An end user's use of evaluation or beta Software or Product is limited to thirty (30) days from original shipment unless otherwise agreed in writing by Fortinet.

8. Governing Law.

Any disputes arising out of this Agreement or Fortinet's limited warranty shall be governed by the laws of the state of California, without regard to the conflict of laws principles. In the event of any disputes arising out of this Agreement or Fortinet's limited warranty, the parties submit to the jurisdiction of the federal and state courts located in Santa Clara County, California, as applicable.

9. Limitation of Liability.

TO THE MAXIMUM EXTENT PERMITTED BY LAW AND NOTWITHSTANDING ANYTHING TO THE CONTRARY, FORTINET IS NOT LIABLE UNDER ANY CONTRACT, NEGLIGENCE, TORT, STRICT LIABILITY, INFRINGEMENT OR OTHER LEGAL OR EQUITABLE THEORY FOR ANY LOSS OF USE OF THE PRODUCT OR SERVICE OR ANY DAMAGES OF ANY KIND WHATSOEVER, WHETHER DIRECT, SPECIAL, INCIDENTAL OR CONSEQUENTIAL (INCLUDING, BUT NOT LIMITED TO, DAMAGES FOR LOSS OF GOODWILL, LOSS OF PROFIT, LOSS OF OPPORTUNITY, LOSS OR DAMAGE RELATED TO USE OF THE PRODUCT OR SERVICE IN CONNECTION WITH HIGH RISK ACTIVITIES, DE-INSTALLATION AND INSTALLATION FEES AND COSTS, DAMAGE TO PERSONAL OR REAL PROPERTY, WORK STOPPAGE, COMPUTER FAILURE OR MALFUNCTION, COMPUTER SECURITY BREACH, COMPUTER VIRUS INFECTION, LOSS OF INFORMATION OR DATA CONTAINED IN, STORED ON, OR INTEGRATED WITH ANY PRODUCT INCLUDING ANY PRODUCT RETURNED TO FORTINET FOR WARRANTY SERVICE) RESULTING FROM THE USE OF THE PRODUCT, RELATING TO WARRANTY SERVICE, OR ARISING OUT OF ANY BREACH OF THE LIMITED WARRANTY IN SECTION 6 ABOVE, EVEN IF FORTINET HAS BEEN ADVISED OF THE POSSIBILITY OF SUCH DAMAGES. THE SOLE REMEDY FOR A BREACH OF THE LIMITED WARRANTY IS REPAIR, REPLACEMENT OR REFUND OF THE DEFECTIVE OR NON-CONFORMING PRODUCT AS SPECIFICALLY STATED IN SECTION 6 ABOVE.

10. Import / Export Requirements; FCPA Compliance.

You are advised that the Products may be subject to the United States Export Administration Regulations and other import and export laws; diversion contrary to United States law and regulation is prohibited. You agree to comply with all applicable international and national laws that apply to the Products as well as end user, end-use, and destination restrictions issued by U.S. and other governments. For additional information on U.S. export controls see www.bis.doc.gov. Fortinet assumes no responsibility or liability for your failure to obtain any necessary import and export approvals, and Fortinet reserves the right to terminate or suspend shipments, services and support in the event Fortinet has a reasonable basis to suspect any import or export violation. You represent that neither the United States Bureau of Industry and Security nor any other governmental agency has issued sanctions against you or otherwise suspended, revoked or denied your export privileges. You agree not to use or transfer the Products for any use relating to nuclear, chemical or biological weapons, or missile technology, unless authorized by the United States Government by regulation or specific written license. Additionally, you agree not to directly or indirectly export, import or transmit the Products contrary to the laws or regulations of any other governmental entity that has jurisdiction over such export, import, transmission or use. Furthermore, you represent that you understand, and you hereby agree to comply with, all requirements of the U.S. Foreign Corrupt Practices Act and all other applicable laws. For beta, testing, evaluation, donation or free Products and/or related services, you hereby agree, represent and warrant to Fortinet that (a) receipt of the Products and/or services comply with all policies and you have obtained all necessary approvals for such Products and/or services, (b) the Products and/or services are not provided in exchange for Fortinet maintaining current business or for new business opportunities, and (c) the Products and/or services are not being received for the benefit of, and are not being transferred to, any government entity, representative or affiliate.

11. U.S. Government End Users.

The Software and accompanying documentation are deemed to be "commercial computer software" and "commercial computer software documentation," respectively, pursuant to DFAR Section 227.7202 and FAR Section 12.212, as applicable. Any use, modification, reproduction, release, performance, display or disclosure of the Software and accompanying documentation by the United States Government shall be governed solely by the terms of this Agreement and shall be prohibited except to the extent expressly permitted by the terms of this Agreement and its successors.

12. Tax Liability.

You agree to be responsible for payment of any sales or use taxes imposed at any time on this transaction.

13. General Provisions.

Except as specifically permitted and required in section 5 ("Transfer") above, you agree not to assign this Agreement or transfer any of the rights or obligations under this Agreement without the prior written consent of Fortinet. This Agreement shall be binding upon, and inure to the benefit of, the successors and permitted assigns of the parties. The United Nations Convention on Contracts for the International Sales of Goods is expressly excluded. This Agreement and other Fortinet agreements may be amended or supplemented only by a writing that refers explicitly to the agreement signed on behalf of both parties, or, for this Agreement, as otherwise expressly provided in the lead-in above Section 1 above, provided, notwithstanding anything to the contrary and except for this Agreement which may be amended or updated as expressly provided in the lead-in above Section 1 above, for any amendment or other agreement to be binding on Fortinet, such amendment or other agreement must be signed by Fortinet's General Counsel. No waiver will be implied from conduct or failure to enforce rights nor effective unless in a writing signed on behalf of the party against whom the waiver is asserted. If any part of this Agreement is found unenforceable, that part will be enforced to the maximum extent permitted and the remainder shall continue in full force and effect. You acknowledge that you have read this Agreement, understand it, and agree to be bound by its terms and conditions.

14. Privacy.

Fortinet's collection, use, protection and transfer of your personal information is governed by the Fortinet privacy policy on the Fortinet web site (http://www.fortinet.com/aboutus/privacy.html).

15. Open Source Software.

Fortinet's products may include software modules that are licensed (or sublicensed) to the user under the GNU General Public License, Version 2, of June 1991 ("GPL") or GNU Lesser General Public License, Version 2.1, of February 1999 ("LGPL") or other open source software licenses which, among other rights, permit the user touse, copy, modify and redistribute modules, or portions thereof, and may also require attribution disclosures and access to the source code ("Open Source Software"). The GPL requires that for any Open Source Software covered under the GPL, which is distributed to someone in an executable binary format, that the source code also be made available to those users. For any Open Source Software covered under the GPL, the source code is made available on this CD or download package. If any Open Source Software licenses require that Fortinet provide rights to use, copy or modify a Open Source Software program that are broader than the rights granted in this agreement, then such rights shall take precedence over the rights and restrictions herein. Fortinet will provide, for a charge reflecting our standard distribution costs, the complete machine-readable copy of the modified software modules. To obtain a complete machine-readable copy, please send your written request, along with a check in the amount of US $25.00, to General Public License Source Code Request, Fortinet, Inc., 899 Kifer Rd, Sunnyvale, CA 94086 USA. In order to receive the modified software modules, you must also include the following information: (a) Name, (b) Address, (c) Telephone number, (d) E-mail Address, (e) Product purchased (if applicable), (f) Product Serial Number (if applicable). All open source software modules are licensed free of charge. There is no warranty for these modules, to the extent permitted by applicable law. The copyright holders provide these software modules "AS-IS" without warranty of any kind, either expressed or implied. In no event will the copyright holder for the open source software be liable to you for damages, including any special, incidental or consequential damages arising out of the use or inability to use the software modules, even if such holder has been advised of the possibility of such damages. A full copy of this license, including additional open source software license disclosures and third party license disclosures applicable to certain Fortinet products, may obtained by contacting Fortinet's Legal Department at legal@fortinet.com.

GNU GENERAL PUBLIC LICENSE GNU GENERAL PUBLIC LICENSE

Version 2, June 1991

Copyright (C) 1989, 1991 Free Software Foundation, Inc.

59 Temple Place, Suite 330, Boston, MA 02111-1307 USA

TERMS AND CONDITIONS FOR COPYING, DISTRIBUTION AND MODIFICATION

This License applies to any program or other work which contains a notice placed by the copyright holder saying it may be distributed under the terms of this General Public License. The "Program", below, refers to any such program or work, and a "work based on the Program" means either the Program or any derivative work under copyright law: that is to say, a work containing the Program or a portion of it, either verbatim or with modifications and/or translated into another language. (Hereinafter, translation is included without limitation in the term "modification".) Each licensee is addressed as "you".

Activities other than copying, distribution and modification are not covered by this License; they are outside its scope. The act of running the Program is not restricted, and the output from the Program is covered only if its contents constitute a work based on the Program (independent of having been made by running the Program). Whether that is true depends on what the Program does.

1. You may copy and distribute verbatim copies of the Program's source code as you receive it, in any medium, provided that you conspicuously and appropriately publish on each

copy an appropriate copyright notice and disclaimer of warranty; keep intact all the notices that refer to this License and to the absence of any warranty; and give any other recipients of the Program a copy of this License along with the Program. You may charge a fee for the physical act of transferring a copy, and you may at your option offer warranty protection in exchange for a fee.

2. You may modify your copy or copies of the Program or any portion of it, thus forming a work based on the Program, and copy and distribute such modifications or work under the terms of Section 1 above, provided that you also meet all of these conditions:

a) You must cause the modified files to carry prominent notices stating that you changed the files and the date of any change.

b) You must cause any work that you distribute or publish, that in whole or in part contains or is derived from the Program or any part thereof, to be licensed as a whole at no charge to all third parties under the terms of this License.

c) If the modified program normally reads commands interactively when run, you must cause it, when started running for such interactive use in the most ordinary way, to print or display an announcement including an appropriate copyright notice and a notice that there is no warranty (or else, saying that you provide a warranty) and that users may redistribute the program under these conditions, and telling the user how to view a copy of this License. (Exception: if the Program itself is interactive but does not normally print such an announcement, your work based on the Program is not required to print an announcement.)

These requirements apply to the modified work as a whole. If identifiable sections of that work are not derived from the Program, and can be reasonably considered independent and separate works in themselves, then this License, and its terms, do not apply to those sections when you distribute them as separate works. But when you distribute the same sections as part of a whole which is a work based on the Program, the distribution of the whole must be on the terms of this License, whose permissions for other licensees extend to the entire whole, and thus to each and every part regardless of who wrote it.. Thus, it is not the intent of this section to claim rights or contest your rights to work written entirely by you; rather, the intent is to exercise the right to control the distribution of derivative or collective works based on the Program. In addition, mere aggregation of another work not based on the Program with the Program (or with a work based on the Program) on a volume of a storage or distribution medium does not bring the other work under the scope of this License.

3. You may copy and distribute the Program (or a work based on it, under Section 2) in object code or executable form under the terms of Sections 1 and 2 above provided that you also do one of the following:

a) Accompany it with the complete corresponding machine-readable source code, which must be distributed under the terms of Sections1 and 2 above on a medium customarily used for software interchange; or,

b) Accompany it with a written offer, valid for at least three years, to give any third party, for a charge no more than your cost of physically performing source distribution, a complete machine-readable copy of the corresponding source code, to be distributed under the terms of Sections 1 and 2 above on a medium customarily used for software interchange; or,

c) Accompany it with the information you received as to the offer to distribute corresponding source code. (This alternative is allowed only for noncommercial distribution and only if you received the program in object code or executable form with such an offer, in accord with Subsection b above.)

Source code for a work means the preferred form of the work for making modifications to it. For an executable work, complete source code means all the source code for all modules it contains, plus any associated interface definition files, plus the scripts used to control compilation and installation of the executable. However, as a special exception, the source code distributed need not include anything that is normally distributed (in either source or binary form) with the major components (compiler, kernel, and so on) of the operating system on which the executable runs, unless that component itself accompanies the executable. If distribution of executable or object code is made by offering access to copy from a designated place, then offering equivalent access to copy the source code from the same place counts as distribution of the source code, even though third parties are not compelled to copy the source along with the object code.

4. You may not copy, modify, sublicense, or distribute the Program except as expressly provided under this License. Any attempt otherwise to copy, modify, sublicense or distribute the Program is void, and will automatically terminate your rights under this License. However, parties who have received copies, or rights, from you under this License will not have their licenses terminated so long as such parties remain in full compliance.

5. You are not required to accept this License, since you have not signed it. However, nothing else grants you permission to modify or distribute the Program or its derivative works. These actions are prohibited by law if you do not accept this License. Therefore, by modifying or distributing the Program (or any work based on the Program), you indicate your acceptance of this License to do so, and all its terms and conditions for copying, distributing or modifying the Program or works based on it.

6. Each time you redistribute the Program (or any work based on the Program), the recipient automatically receives a license from the original licensor to copy, distribute or modify the Program subject to these terms and conditions. You may not impose any further restrictions on the recipients' exercise of the rights granted herein. You are not responsible for enforcing compliance by third parties to this License.

7. If, as a consequence of a court judgment or allegation of patent infringement or for any other reason (not limited to patent issues), conditions are imposed on you (whether by court order, agreement or otherwise) that contradict the conditions of this License, they do not excuse you from the conditions of this License. If you cannot distribute so as to satisfy simultaneously your obligations under this License and any other pertinent obligations, then as a consequence you may not distribute the Program at all. For example, if a patent license would not permit royalty-free redistribution of the Program by all those who receive copies directly or indirectly through you, then the only way you could satisfy both it and this License would be to refrain entirely from distribution of the Program.

If any portion of this section is held invalid or unenforceable under any particular circumstance, the balance of the section is intended to apply and the section as a whole is intended to apply in other circumstances.

It is not the purpose of this section to induce you to infringe any patents or other property right claims or to contest validity of any such claims; this section has the sole purpose of protecting the integrity of the free software distribution system, which is implemented by public license practices. Many people have made generous contributions to the wide range of software distributed through that system in reliance on consistent application of that system; it is up to the author/donor to decide if he or she is willing to distribute software through any other system and a licensee cannot impose that choice.

This section is intended to make thoroughly clear what is believed to be a consequence of the rest of this License.

8. If the distribution and/or use of the Program is restricted in certain countries either by patents or by copyrighted interfaces, the original copyright holder who places the Program under this License may add an explicit geographical distribution limitation excluding those countries, so that distribution is permitted only in or among countries not thus excluded. In such case, this License incorporates the limitation as if written in the body of this License.

9. The Free Software Foundation may publish revised and/or new versions of the General Public License from time to time. Such new versions will be similar in spirit to the present version, but may differ in detail to address new problems or concerns. Each version is given a distinguishing version number. If the Program specifies a version number of this License which applies to it and "any later version", you have the option of following the terms and conditions either of that version or of any later version published by the Free Software Foundation. If the Program does not specify a version number of this License, you may choose any version ever published by the Free Software Foundation.

10. If you wish to incorporate parts of the Program into other free programs whose distribution conditions are different, write to the author to ask for permission. For software which is copyrighted by the Free Software Foundation, write to the Free Software Foundation; we sometimes make exceptions for this. Our decision will be guided by the two goals of preserving the free status of all derivatives of our free software and of promoting the sharing and reuse of software generally.

NO WARRANTY

11. BECAUSE THE PROGRAM IS LICENSED FREE OF CHARGE, THERE IS NO WARRANTY FOR THE PROGRAM, TO THE EXTENT PERMITTED BY APPLICABLE LAW. EXCEPT WHEN OTHERWISE STATED IN WRITING THE COPYRIGHT HOLDERS AND/OR OTHER PARTIES PROVIDE THE PROGRAM "AS IS" WITHOUT WARRANTY OF ANY KIND, EITHER EXPRESSED OR IMPLIED, INCLUDING, BUT NOT LIMITED TO, THE IMPLIED WARRANTIES OF MERCHANTABILITY AND FITNESS FOR A PARTICULAR PURPOSE. THE ENTIRE RISK AS TO THE QUALITY AND PERFORMANCE OF THE PROGRAM IS WITH YOU. SHOULD THE PROGRAM PROVE DEFECTIVE, YOU ASSUME THE COST OF ALL NECESSARY SERVICING, REPAIR OR CORRECTION.

12. IN NO EVENT UNLESS REQUIRED BY APPLICABLE LAW OR AGREED TO IN WRITING WILL ANY COPYRIGHT HOLDER, OR ANY OTHER PARTY WHO MAY MODIFY AND/OR REDISTRIBUTE THE PROGRAM AS PERMITTED ABOVE, BE LIABLE TO YOU FOR DAMAGES, INCLUDING ANY GENERAL, SPECIAL, INCIDENTAL OR CONSEQUENTIAL DAMAGES ARISING OUT OF THE USE OR INABILITY TO USE THE PROGRAM (INCLUDING BUT NOT LIMITED TO LOSS OF DATA OR DATA BEING RENDERED INACCURATE OR LOSSES SUSTAINED BY YOU OR THIRD PARTIES OR A FAILURE OF THE PROGRAM TO OPERATE WITH ANY OTHER PROGRAMS), EVEN IF SUCH HOLDER OR OTHER PARTY HAS BEEN ADVISED OF THE POSSIBILITY OF SUCH DAMAGES.

GNU LESSER GENERAL PUBLIC LICENSE

Version 2.1, February 1999

Copyright (C) 1991, 1999 Free Software Foundation, Inc.

59 Temple Place, Suite 330, Boston, MA 02111-1307 USA

TERMS AND CONDITIONS FOR COPYING, DISTRIBUTION AND MODIFICATION

0. This License Agreement applies to any software library or other program which contains a notice placed by the copyright holder or other authorized party saying it may be distributed under the terms of this Lesser General Public License (also called "this License"). Each licensee is addressed as "you".

A "library" means a collection of software functions and/or data prepared so as to be conveniently linked with application programs (which use some of those functions and data) to form executables.

The "Library", below, refers to any such software library or work which has been distributed under these terms. A "work based on the Library" means either the Library or any derivative work under copyright law: that is to say, a work containing the Library or a portion of it, either verbatim or with modifications and/or translated straightforwardly into another language. (Hereinafter, translation is included without limitation in the term "modification".)

"Source code" for a work means the preferred form of the work for making modifications to it. For a library, complete source code means all the source code for all modules it contains, plus any associated interface definition files, plus the scripts used to control compilation and installation of the library.

Activities other than copying, distribution and modification are not covered by this License; they are outside its scope. The act of running a program using the Library is not restricted, and output from such a program is covered only if its contents constitute a work based on the Library (independent of the use of the Library in a tool for writing it). Whether that is true depends on what the Library does and what the program that uses the Library does.

1. You may copy and distribute verbatim copies of the Library's complete source code as you receive it, in any medium, provided that you conspicuously and appropriately publish on each copy an appropriate copyright notice and disclaimer of warranty; keep intact all the notices that refer to this License and to the absence of any warranty; and distribute a copy of this License along with the Library. You may charge a fee for the physical act of transferring a copy, and you may at your option offer warranty protection in exchange for a fee.

2. You may modify your copy or copies of the Library or any portion of it, thus forming a work based on the Library, and copy and distribute such modifications or work under the terms of Section 1 above, provided that you also meet all of these conditions:

a) The modified work must itself be a software library.

b) You must cause the files modified to carry prominent notices stating that you changed the files and the date of any change.

c) You must cause the whole of the work to be licensed at no charge to all third parties under the terms of this License.

d) If a facility in the modified Library refers to a function or a table of data to be supplied by an application program that uses the facility, other than as an argument passed when the facility is invoked, then you must make a good faith effort to ensure that, in the event an application does not supply such function or table, the facility still operates, and performs whatever part of its purpose remains meaningful.

These requirements apply to the modified work as a whole. If identifiable sections of that work are not derived from the Library, and can be reasonably considered independent and separate works in themselves, then this License, and its terms, do not apply to those sections when you distribute them as separate works. But when you distribute the same sections as part of a whole which is a work based on the Library, the distribution of the whole must be on the terms of this License, whose permissions for other licensees extend to the entire whole, and thus to each and every part regardless of who wrote it. Thus, it is not the intent of this section to claim rights or contest your rights to work written entirely by you; rather, the intent is to exercise the right to control the distribution of derivative or collective works based on the Library. In addition, mere aggregation of another work not based on the Library with the Library (or with a work based on the Library) on a volume of a storage or distribution medium does not bring the other work under the scope of this License.

3. You may opt to apply the terms of the ordinary GNU General Public License instead of this License to a given copy of the Library. To do this, you must alter all the notices that refer to this License, so that they refer to the ordinary GNU General Public License, version 2 instead of to this License. (If a newer version than version 2 of the ordinary GNU General Public License has appeared, then you can specify that version instead if you wish.) Do not make any other change in these notices.

Once this change is made in a given copy, it is irreversible for that copy, so the ordinary GNU General Public License applies to all subsequent copies and derivative works made from that copy. This option is useful when you wish to copy part of the code of the Library into a program that is not a library.

4. You may copy and distribute the Library (or a portion or derivative of it, under Section 2) in object code or executable form under the terms of Sections 1 and 2 above provided that you accompany it with the complete corresponding machine-readable source code, which must be distributed under the terms of Sections 1 and 2 above on a medium customarily used for software interchange.

If distribution of object code is made by offering access to copy from a designated place, then offering equivalent access to copy the source code from the same place satisfies the requirement to distribute the source code, even though third parties are not compelled to copy the source along with the object code.

5. A program that contains no derivative of any portion of the Library, but is designed to work with the Library by being compiled or linked with it, is called a "work that uses the Library". Such a work, in isolation, is not a derivative work of the Library, and therefore falls outside the scope of this License.

However, linking a "work that uses the Library" with the Library creates an executable that is a derivative of the Library (because it contains portions of the Library), rather than a "work that uses the library". The executable is therefore covered by this License. Section 6 states terms for distribution of such executables.

When a "work that uses the Library" uses material from a header file that is part of the Library, the object code for the work may be a derivative work of the Library even though the source code is not.

Whether this is true is especially significant if the work can be linked without the Library, or if the work is itself a library. The threshold for this to be true is not precisely defined by law.

If such an object file uses only numerical parameters, data structure layouts and accessors, and small macros and small inline functions (ten lines or less in length), then the use of the object file is unrestricted, regardless of whether it is legally a derivative work. (Executables containing this object code plus portions of the Library will still fall under Section 6.)

Otherwise, if the work is a derivative of the Library, you may distribute the object code for the work under the terms of Section 6. Any executables containing that work also fall under Section 6, whether or not they are linked directly with the Library itself.

6. As an exception to the Sections above, you may also combine or link a "work that uses the Library" with the Library to produce a work containing portions of the Library, and distribute that work under terms of your choice, provided that the terms permit modification of the work for your own use and reverse engineering for debugging such modifications.

You must give prominent notice with each copy of the work that the Library is used in it and that the Library and its use are covered by this License. You must supply a copy of this License. If the work during execution displays copyright notices, you must include the copyright notice for the Library among them, as well as a reference directing the user to the copy of this License. Also, you must do one of these things:

a) Accompany the work with the complete corresponding machine-readable source code for the Library including whatever changes were used in the work (which must be distributed under Sections 1 and 2 above); and, if the work is an executable linked with the Library, with the complete machine-readable "work that uses the Library", as object code and/or source code, so that the user can modify the Library and then relink to produce a modified executable containing the modified Library. (It is understood that the user who changes the contents of definitions files in the Library will not necessarily be able to recompile the application to use the modified definitions.)

b) Use a suitable shared library mechanism for linking with the Library. A suitable mechanism is one that (1) uses at run time a copy of the library already present on the user's computer system, rather than copying library functions into the executable, and (2) will operate properly with a modified version of the library, if the user installs one, as long as the modified version is interface-compatible with the version that the work was made with.

c) Accompany the work with a written offer, valid for at least three years, to give the same user the materials specified in Subsection 6a, above, for a charge no more than the cost of performing this distribution.

d) If distribution of the work is made by offering access to copy from a designated place, offer equivalent access to copy the above specified materials from the same place.

e) Verify that the user has already received a copy of these materials or that you have already sent this user a copy.

For an executable, the required form of the "work that uses the Library" must include any data and utility programs needed for reproducing the executable from it. However, as a special exception, the materials to be distributed need not include anything that is normally distributed (in either source or binary form) with the major components (compiler, kernel, and so on) of the operating system on which the executable runs, unless that component itself accompanies the executable. It may happen that this requirement contradicts the license restrictions of other proprietary libraries that do not normally accompany the operating system. Such a contradiction means you cannot use both them and the Library together in an executable that you distribute.

7. You may place library facilities that are a work based on the Library side-by-side in a single library together with other library facilities not covered by this License, and distribute such a combined library, provided that the separate distribution of the work based on the Library and of the other library facilities is otherwise permitted, and provided that you do these two things:

a) Accompany the combined library with a copy of the same work based on the Library, uncombined with any other library facilities. This must be distributed under the terms of the Sections above.

b) Give prominent notice with the combined library of the fact that part of it is a work based on the Library, and explaining where to find the accompanying uncombined form of the same work.

8. You may not copy, modify, sublicense, link with, or distribute the Library except as expressly provided under this License. Any attempt otherwise to copy, modify, sublicense, link with, or distribute the Library is void, and will automatically terminate your rights under this License. However, parties who have received copies, or rights, from you under this License will not have their licenses terminated so long as such parties remain in full compliance.

9. You are not required to accept this License, since you have not signed it. However, nothing else grants you permission to modify or distribute the Library or its derivative works. These actions are prohibited by law if you do not accept this License. Therefore, by modifying or distributing the Library (or any work based on the Library), you indicate your acceptance of this License to do so, and all its terms and conditions for copying, distributing or modifying the Library or works based on it.

10. Each time you redistribute the Library (or any work based on the Library), the recipient automatically receives a license from the original licensor to copy, distribute, link with or modify the Library subject to these terms and conditions. You may not impose any further restrictions on the recipients' exercise of the rights granted herein. You are not responsible for enforcing compliance by third parties with this License.

11. If, as a consequence of a court judgment or allegation of patent infringement or for any other reason (not limited to patent issues), conditions are imposed on you (whether by court order, agreement or otherwise) that contradict the conditions of this License, they do not excuse you from the conditions of this License. If you cannot distribute so as to satisfy simultaneously your obligations under this License and any other pertinent obligations, then as a consequence you may not distribute the Library at all. For example, if a patent license would not permit royalty-free redistribution of the Library by all those who receive copies directly or indirectly through you, then the only way you could satisfy both it and this License would be to refrain entirely from distribution of the Library.

If any portion of this section is held invalid or unenforceable under any particular circumstance, the balance of the section is intended to apply, and the section as a whole is intended to apply in other circumstances.

It is not the purpose of this section to induce you to infringe any patents or other property right claims or to contest validity of any such claims; this section has the sole purpose of protecting the integrity of the free software distribution system which is implemented by public license practices. Many people have made generous contributions to the wide range of software distributed through that system in reliance on consistent application of that system; it is up to the author/donor to decide if he or she is willing to distribute software through any other system and a licensee cannot impose that choice. This section is intended to make thoroughly clear what is believed to be a consequence of the rest of this License.

12. If the distribution and/or use of the Library is restricted in certain countries either by patents or by copyrighted interfaces, the original copyright holder who places the Library under this License may add an explicit geographical distribution limitation excluding those countries, so that distribution is permitted only in or among countries not thus excluded. In such case, this License incorporates the limitation as if written in the body of this License.

13. The Free Software Foundation may publish revised and/or new versions of the Lesser General Public License from time to time. Such new versions will be similar in spirit to the present version, but may differ in detail to address new problems or concerns. Each version is given a distinguishing version number. If the Library specifies a version number of this License which applies to it and "any later version", you have the option of following the terms and conditions either of that version or of any later version published by the Free Software Foundation. If the Library does not specify a license version number, you may choose any version ever published by the Free Software Foundation.

14. If you wish to incorporate parts of the Library into other free programs whose distribution conditions are incompatible with these, write to the author to ask for permission. For software which is copyrighted by the Free Software Foundation, write to the Free Software Foundation; we sometimes make exceptions for this. Our decision will be guided by the two goals of preserving the free status of all derivatives of our free software and of promoting the sharing and reuse of software generally.

15. The warranty disclaimer contained in Sections 11 and 12 of the preceding GPL License is incorporated herein.

Fortinet Customer Service & Support

Create a support account, register and manage your products, download updates, firmware images and release notes, and create technical support tickets.
https://support.fortinet.com

Fortinet Document Library

Up-to-date versions of Fortinet publications for the entire family of Fortinet products.
http://docs.fortinet.com

Training Services

Course descriptions, availability, schedules, and location of training programs in your area.
http://www.fortinet.com/training/index.html

Technical Discussion Forums

Communicate with other customers and Fortinet partners about Fortinet products, services, and configuration issues.
https://support.fortinet.com/forum

FortiGuard Threat Research and Response

Up-to-date information on vulnerabilities and threats, includes a virus scanner, IP signature look-up, and web filtering tools.
http://www.fortiguard.com

Fortinet.com