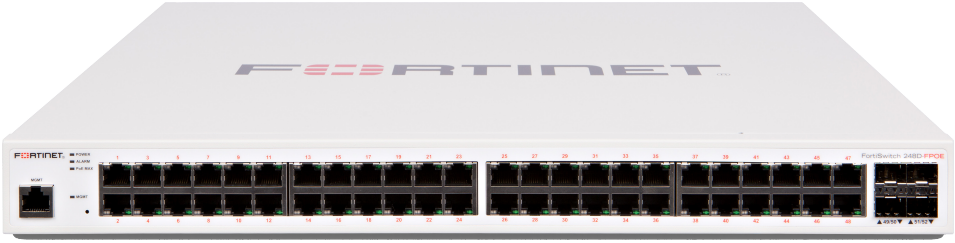

FortiSwitch 248D / 248D-FPOE

QuickStart Guide

February 05, 2026

This guide covers: FS-248D, FS-248D-FPOE

Copyright© 2026 Fortinet, Inc. All rights reserved. Fortinet®, FortiGate®, FortiCare® and FortiGuard®, and certain other marks are registered trademarks of Fortinet, Inc., in the U.S. and other jurisdictions, and other Fortinet names herein may also be registered and/or common law trademarks of Fortinet. All other product or company names may be trademarks of their respective owners. Performance and other metrics contained herein were attained in internal lab tests under ideal conditions, and actual performance and other results may vary. Network variables, different network environments and other conditions may affect performance results. Nothing herein represents any binding commitment by Fortinet, and Fortinet disclaims all warranties, whether express or implied, except to the extent Fortinet enters a binding written contract, signed by Fortinet's Legal and above, with a purchaser that expressly warrants that the identified product will perform according to certain expressly-identified performance metrics and, in such event, only the specific performance metrics expressly identified in such binding written contract shall be binding on Fortinet. For absolute clarity, any such warranty will be limited to performance in the same ideal conditions as in Fortinet's internal lab tests. In no event does Fortinet make any commitment related to future deliverables, features or development, and circumstances may change such that any forward-looking statements herein are not accurate. Fortinet disclaims in full any covenants, representations, and guarantees pursuant hereto, whether express or implied. Fortinet reserves the right to change, modify, transfer, or otherwise revise this publication without notice, and the most current version of the publication shall be applicable.

For Product License Agreement / EULA and Warranty Terms, visit https://www.fortinet.com/content/dam/fortinet/assets/legal/EULA.pdf

Register for Support

Register your Fortinet product to receive:
- Technical Support
- New product features
- Protection from new threats

Vous devez enregistrer le produit pour recevoir:
- Support technique
- Nouvelles fonctionnalitées du produit
- Protection contre de nouvelles menaces

La reistrazione ti permette di usufruire di:
- Supporto Tecnico
- Nuove funzionalita
- Proteezione dalle ultime minaccce

Debe registrar el producto para recibir:
- Apoyo técnico
- Nuevas funcionalidades del producto
- Protección contra ataques

登録のお願い
本日、フォーティネット製品の登録をしてください。
登録すると次のメリットがあります。
テクニカルサポート・新機能の追加・新しい脅威への防御

请马上注册
您的飞塔产品
您在注册以后才能得到技术支持、新产品特点信息、最新威胁防护

https://support.fortinet.com
Toll free: 1 866 648 4638
Phone: 1 408 486 7899
Fax: 1 408 235 7737
Email: register@fortinet.com

Box Includes

FortiSwitch 248D/248D-FPOE

QuickStart Guide

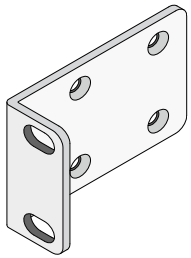

2 Rack-Mount Brackets

Power Cable

Console Cable
(USB to RJ45)

4 Rubber Feet

8 Bracket Screws

1 Basic Connections

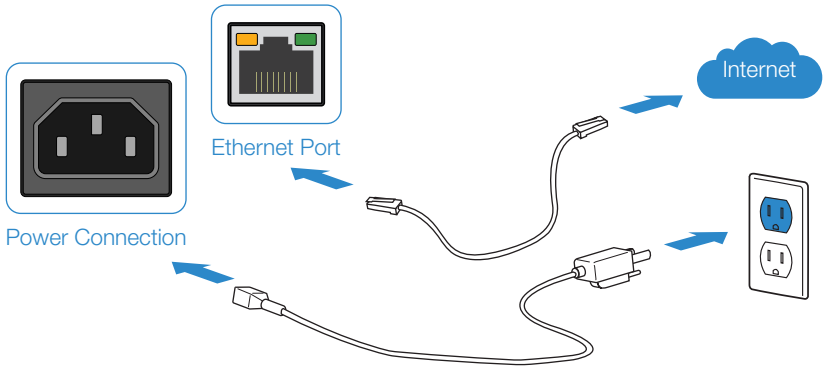

Connect your device to a power outlet and an Internet connection. This is usually a modem, but could also be another device on your network.

2 Setup Options

Web Browser

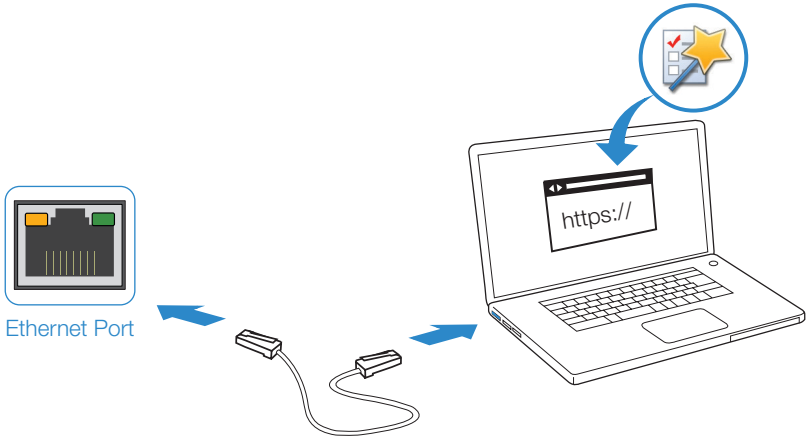

To Connect to the GUI

1. Connect the Ethernet cable.
2. Configure the management computer to be on the same subnet as the internal interface as the FortiSwitch unit:

   IP address: 192.168.1.2
   Netmask: 255.255.255.0

3. Visit 192.168.1.99 in your web browser.
4. Login using username "admin" and no password.
5. Configure your device and save your settings.
6. Register your device from the dashboard page.

Terminal Emulation

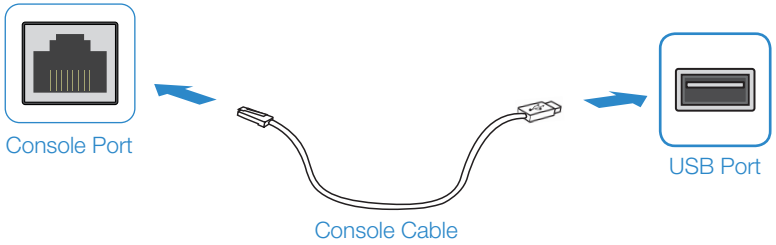

To Connect to the CLI

1. Connect the device's console port to the management computer using the provided console cable.
2. Start a terminal emulation program on the management computer, select the COM port, and use the following settings:

   Baud Rate: 115200
   Data bits: 8
   Parity: None
   Stop bits: 1
   Flow Control: None

3. Press Enter on your keyboard to connect to the CLI.
4. Login using username "admin" and no password. You can now proceed with configuring your device.

   Get started by typing "?" for a list of available commands.

   Begin typing a command then type "?" for a list of available ways to complete. For example "config ?" will show the lowest level of configuration options.

FortiLink

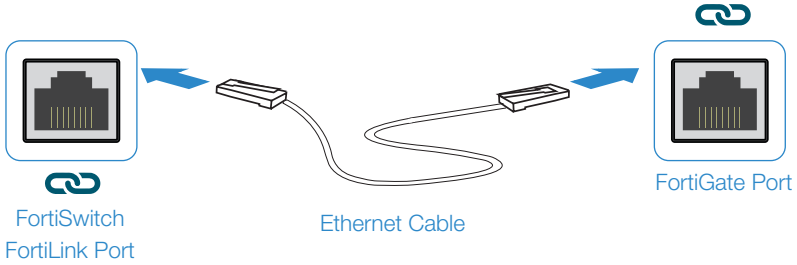

1. Connect a FortiSwitch FortiLink Port directly using an Ethernet Cable to a FortiGate FortiLink Port or any FortiGate Port that is not an HA port.

2. Login to the FortiGate and go to the WiFi and Switch Controller --> FortiLink Interface.

3. Add a FortiGate Port in the FortiLink interface and choose Automatically authorize devices.

4. When the FortiSwitch is online in the WiFi and Switch Controller --> Managed FortiSwitch section, you can now manage your FortiSwitch.

Cloud Management (Connect a port to the Internet)

1. Visit support.fortinet.com to register your device and cloud management license.

2. Sign in at https://fortiedge.forticloud.com to manage your Inventory List.

3 Installation

The FortiSwitch unit can be placed on any flat surface, or mounted in any standard 19 inch rack unit with the provided rack-mount brackets and screws.

Please read "Cautions and Warnings" *prior to installing your device.*

Caution: Electrostatic discharge (ESD) can damage your Fortinet equipment.

Do not place heavy objects on the unit.

To avoid personal injury or damage to the unit, it is recommended that two or more people install the unit into the rack.

Note: If the unit has a redundant power supply, each power cable should be connected to a different power source. In this way, if one power source fails, the other may still be operational and the unit will not lose power.

To install the FortiSwitch unit into a rack

1. Ensure that the FortiSwitch unit is placed on a stable surface prior to rack-mount installation.
2. Attach the provided rack-mount brackets to the sides of the unit using the provided bracket screws.

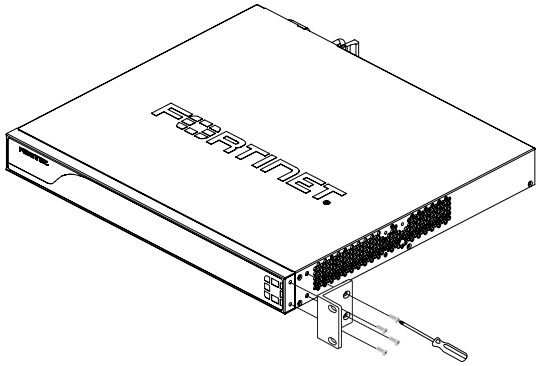

3. Position the FortiSwitch unit in the rack. Ensure there is enough room around the unit to allow for sufficient air flow.

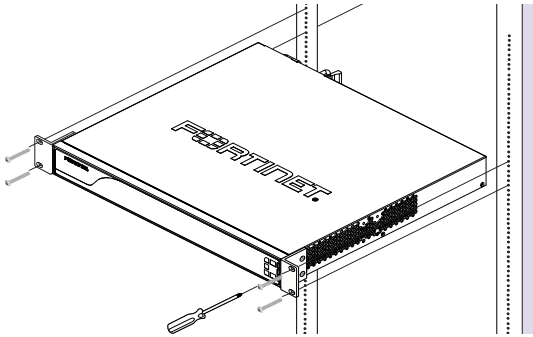

4. Line up the rack-mount bracket holes to the holes on the rack and ensure that the FortiSwitch unit is level.
5. Finger tighten four rack-mount screws to attach the unit to the rack.
6. Verify that the spacing around the FortiSwitch unit conforms to requirements and that the unit is level, then tighten the rack-mount screws with an appropriate screwdriver.
7. Plug the provided power cable into the rear of the unit, and then into a grounded electrical outlet or a separate power source such as an uninterruptible power supply (UPS) or a power distribution unit (PDU).

To install the unit on a flat surface

1. Ensure that the surface onto which the FortiSwitch unit to be installed is clean, level, and stable and that there is at least 1.5in (3.8cm) of clearance on all sides to allow for adequate airflow.
2. Attach the provided rubber feet to the bottom of the FortiSwitch unit.
3. Place the unit in the designated location.
4. Verify that the spacing around the FortiSwitch unit conforms to requirements and that the unit is level.

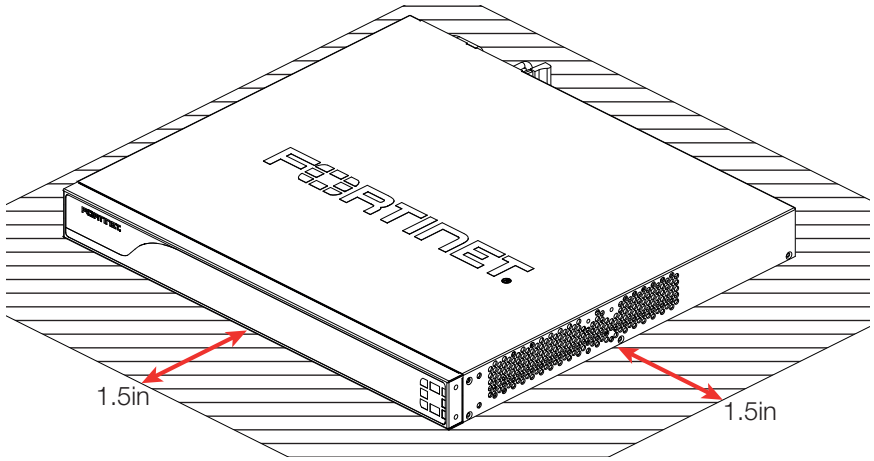

5. Plug the provided power cable into the rear of the unit, and then into a grounded electrical outlet or a separate power source such as an uninterruptible power supply (UPS) or a power distribution unit (PDU).

FortiSwitch 248D

Ethernet Ports Link/Activity
- Green: Connected
- Flashing Green: Transmitting & receiving data
- Off: No link established

Ethernet Ports Speed
- Green: Connected at 1Gbps
- Amber: Connected at 100Mbps
- Off: Connected at 10Mbps or not in use

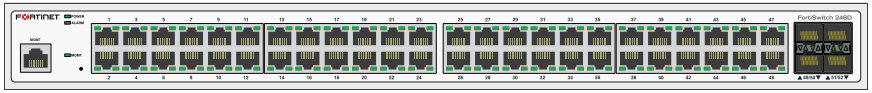

SFP Ports Speed
- Green: Connected at 1Gbps

SFP Ports Link/Activity
- Green: Connected
- Flashing Green: Transmitting & receiving data
- Off: No link established

Power
- Green: The unit is on
- Off: The unit is off

Alarm
- Amber: The unit has a fault
- Off: No faults detected

MGMT
- Green: Connected
- Flashing Green: Transmitting & receiving data
- Off: No link established

FortiSwitch 248D

Ethernet Ports 1 to 48 (RJ-45)
Gigabit Ethernet network connections

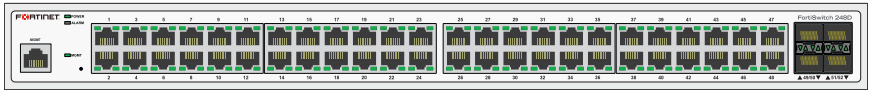

MGMT (RJ-45)
Client port for management
Default IP address is 192.168.1.99

SFP Ports 49 to 52 (SFP)
1Gbps small form-factor pluggable transceiver ports

Console (RJ-45)
Optional connection to the management computer
Provides access to the CLI

Power
100-240V AC, 50-60Hz, 1.4A Max

FortiSwitch 248D-FPOE

PoE Ports Link/Activity
- Green: Connected
- Flashing Green: Transmitting & receiving data
- Off: No link established

PoE Ports Power
- Amber: Providing power
- Off: Not providing power

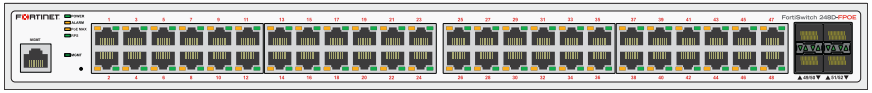

SFP Ports Speed
- Green: Connected at 1Gbps

SFP Ports Link/Activity
- Green: Connected
- Flashing Green: Transmitting & receiving data
- Off: No link established

Power
- Green: The unit is on
- Off: The unit is off

Alarm
- Amber: The unit has a fault
- Off: No faults detected

PoE MAX
- Amber: Maximum output power budget reached
- Off: Power available for new PD

RPS
- Green: RPS input voltage is normal
- Amber: RPS failure
- Off: No connection

MGMT
- Green: Connected
- Flashing Green: Transmitting & receiving data
- Off: No link established

FortiSwitch 248D-FPOE

Ethernet Ports 1 to 48 (RJ-45)
Gigabit Ethernet ports with smart Power over Ethernet (PoE) providing up to a maximum of 370W for all ports

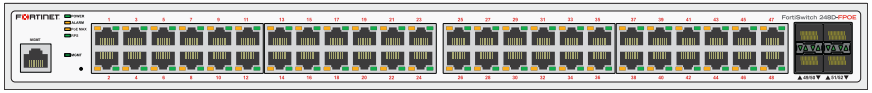

MGMT (RJ-45)
Client port for management
Default IP address is 192.168.1.99

SFP Ports 49 to 52 (SFP)
1Gbps small form-factor pluggable transceiver ports

RPS
Optional connection for redundant power
12V DC, 14A and -54V DC, 7.8A

Console (RJ-45)
Optional connection to the management computer
Provides access to the CLI

Power
100-240V AC, 50-60Hz, 8.0A Max

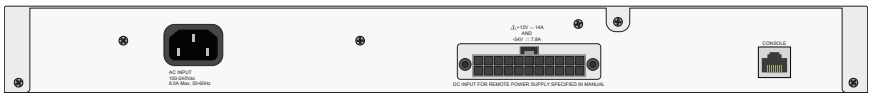

SFP Transceivers

Caution: SFP transceivers are static sensitive devices. Use an ESD wrist strap or similar grounding device when handling transceivers.

Do not force the SFP transceivers into the cage slots. If the transceiver does not easily slide in and click into place, it may not be aligned correctly or may be upside down. If this happens, remove the SFP transceiver, realign it or rotate it and slide it in again.

Note: Installing and removing SFP transceivers can shorten their useful life. Do not install or remove transceivers more than is necessary.

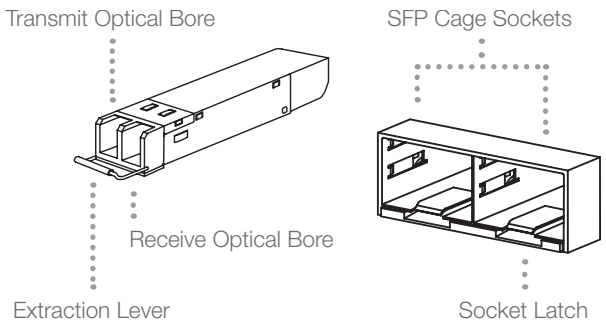

To install the SFP transceivers

1. Ensure that you are properly grounded.
2. Remove the caps from the SFP cage sockets on the front panel of the unit.
3. Position the SFP transceiver in front of the cage socket opening and ensure that the transceiver is correctly oriented. When the transceiver is correctly oriented, the extraction lever will be level with the socket latch.
   Note: SFP cage socket orientation may vary. Ensure that the SFP transceiver module is correctly oriented each time that you are inserting a transceiver.
4. Hold the sides of the SFP transceiver and slide it into the cage socket until it clicks into place.

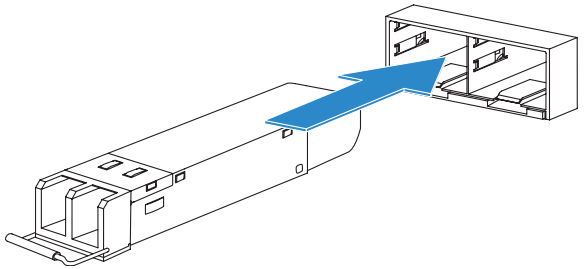

5. Press the transceiver firmly into the cage socket with your thumb.
6. Verify that the transceiver is latched correctly by grasping the sides of the transceiver and trying to pull it out without lowering the extraction lever.
   If the transceiver cannot be removed, it is installed and latched correctly.
   If the transceiver can be removed, reinsert it and press harder with your thumb.
   If necessary, repeat this process until the transceiver is securely latched into the cage socket.

To remove the SFP transceivers

1. Ensure that you are properly grounded.
2. If applicable, disconnect the fiber-optic cable from the transceiver connector and install a clean dust plug in the transceiver's optical bores.
3. Pull the extraction lever out and down to eject the transceiver. If you are unable to use your finger to open the lever, use a small flat-head screwdriver or other similar tool to open the lever.

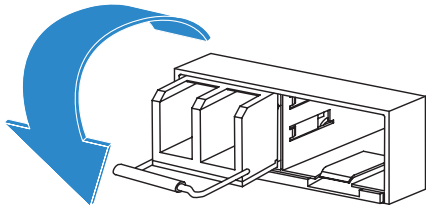

4. Hold the sides of the transceiver and carefully pull it away from the cage socket.

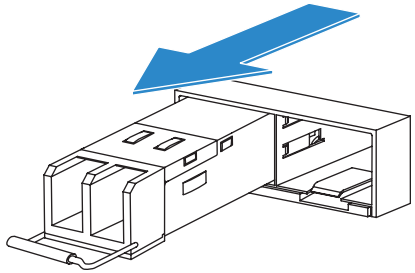

5. Replace the cap on the SFP cage socket and place the removed SFP transceiver into an antistatic bag.

Caution: Do not install or remove SFP transceivers while fiber-optic cables are still attached. This can cause damage to the cables, cable connectors, and the optical interfaces. It may also prevent the transceiver from latching correctly into the socket connector.

Note: Follow proper fiber-optic handling procedures when installing and removing SFP transceivers to ensure the devices remain clean and are not damaged.

Cautions and Warnings

Environmental Specifications

Ambient operating temperature: 0C to 40C

Rack Mount Instructions - The following or similar rack-mount instructions are included with the installation instructions:

Instructions de montage en rack - Les instructions de montage en rack suivantes ou similaires sont incluses avec les instructions d'installation:

Elevated Operating Ambient - If installed in a closed or multi-unit rack assembly, the operating ambient temperature of the rack environment may be greater than room ambient. Therefore, consideration should be given to installing the equipment in an environment compatible with the maximum ambient temperature (T_{ma}) specified by the manufacturer.
Température ambiante élevée – S'il est installé dans un rack fermé ou à unités multiples, la température ambiante de fonctionnement de l'environnement du rack peut être supérieure à la température ambiante de la pièce. Par conséquent, il est important d'installer le matériel dans un environnement respectant la température ambiante maximale (T_{ma}) stipulée par le fabricant.

Reduced Air Flow - Installation of the equipment in a rack should be such that the amount of air flow required for safe operation of the equipment is not compromised.
Ventilation réduite – Installation de l'équipement dans un rack doit être telle que la quantité de flux d'air nécessaire au bon fonctionnement de l'équipement n'est pas compromise.

Mechanical Loading - Mounting of the equipment in the rack should be such that a hazardous condition is not achieved due to uneven mechanical loading.
Chargement Mécanique – Montage de l'équipement dans le rack doit être telle qu'une situation dangereuse n'est pas lié à un chargement mécanique inégal.

Circuit Overloading - Consideration should be given to the connection of the equipment to the supply circuit and the effect that overloading of the circuits might have on overcurrent protection and supply wiring. Appropriate consideration of equipment nameplate ratings should be used when addressing this concern.
Surtension – Il convient de prendre l'ensemble des précautions nécessaires lors du branchement de l'équipement au circuit d'alimentation et être particulièrement attentif aux effets de la suralimentation sur le dispositif assurant une protection contre les courts-circuits et le câblage. Ainsi, il est recommandé de tenir compte du numéro d'identification de l'équipement.

Reliable Earthing - Reliable earthing of rack-mounted equipment should be maintained. Particular attention should be given to supply connections other than direct connections to the branch circuit (e.g. use of power strips).
Fiabilité de la mise à la terre– Fiabilité de la mise à la terre de l'équipement monté en rack doit être maintenue. Une attention particulière devrait être accordée aux connexions d'alimentation autres que les connexions directes au circuit de dérivation (par exemple de l'utilisation de bandes de puissance).

Safety

Warning: Equipment intended for installation in Restricted Access Location.

Avertissement: Le matériel est conçu pour être installé dans un endroit où l'accès est restreint.

Caution: This equipment is to be used in a Network Environment 0 per IECTR 62101. This product is connected only to PoE networks without routing to the outside plant.

Attention: Ce matériel doit être utilisé dans un Environnement Réseau 0 par IECTR 62101. Ce produit est uniquement connecté aux réseaux PoE sans installation externe de routage.

The RPS connection is intended to be connected to the power source from Fortinet IEC certified/UL Listed equipment. The power rating of the product must be less than or equal to the output rating of the power source.

La connexion de RPS est destiné à être relié à la source de Fortinet CEI de matériel homologué / Listé UL puissance. La puissance nominale du produit doit être inférieure ou égale à la puissance nominale de sortie de la source d'alimentation.

Regulatory Compliance

Federal Communication Commission (FCC) – USA

This device complies with Part 15 of the FCC Rules. Operation is subject to the following two conditions:
(1) this device may not cause harmful interference, and
(2) this device must accept any interference received; including interference that may cause undesired operation.

This equipment has been tested and found to comply with the limits for a Class A digital device, pursuant to Part 15 of the FCC Rules. These limits are designed to provide reasonable protection against harmful interference when the equipment is operated in a commercial environment. This equipment generates, uses, and can radiate radio frequency energy, and if it is not installed and used in accordance with the instruction manual, it may cause harmful interference to radio communications. Operation of this equipment in a residential area is likely to cause harmful interference, in which case the user will be required to correct the interference at his own expense.

WARNING: Any changes or modifications to this product not expressly approved by the party responsible for compliance could void the user's authority to operate the equipment

Industry Canada Equipment Standard for Digital Equipment (ICES) – Canada

CAN ICES-3 (A) / NMB-3 (A)

This digital apparatus does not exceed the Class A limits for radio noise emissions from digital apparatus set out in the Radio Interference Regulations of the Canadian Department of Communications.

Cet appareil numérique n'émet pas de bruits radioélectriques dépassant les limites applicables aux appareils numériques de la classe A prescrites dans le Règlement sur le brouillage radioélectrique édicte par le ministère des Communications du Canada.

European Conformity (CE) - EU

This is a Class A product. In a domestic environment, this product may cause radio interference, in which case the user may be required to take adequate measures.

Voluntary Control Council for Interference (VCCI) – Japan

この装置は、クラスA機器です。この装置を住宅環境で使用すると電波妨害を引き起こすことがあります。この場合には使用者が適切な対策を講ずるよう要求されることがあります。

VCCI－A

Product Safety Electrical Appliance & Material (PSE) – Japan

日本では電気用品安全法(PSE)の規定により、同梱している電源コードは本製品の専用電源コードとして利用し、他の製品に使用しないでください。

Bureau of Standards Metrology and Inspection (BSMI) – Taiwan

限用物質含有情況表 (RoHS Table) 請到以下 網址下載:
https://www.fortinet.com/bsmi

警告: 為避免電磁干擾，本產品不應安裝或使用於住宅環境。

請仔細閱讀以下說明
本設備勿置於潮濕處。
連接至電源前，請先檢查電壓。
當設備不用時，請將所有電源線拔除，避免電壓不穩而造成傷害。
勿將任何液體濺入設備中，避免線路短路。
基於安全理由，只有受到專業訓練的從業人員，才可以打開本設備。
請勿自行調整或修理已通電的設備，以確保您的安全。
如不小心受傷，請立刻找急救人員給予您適當的救護，千萬別因傷勢輕微而忽略自己的傷勢。

請依照台灣法規處置電池。
若不正確替換電池可能導致爆炸危險，替換電池時，請使用設備生產商推薦使用的電池。
請勿拆卸、刺穿或以其他方式損壞電池。

英屬蓋曼群島商防特網股份有限公司台灣分公司
地址：台北市內湖區行愛路176號2樓
電話：(02) 27961666

For FS-248D only:

Agência Nacional de Telecomunicações (ANATEL) – Brazil

Este produto não é apropriado para uso em ambientes domésticos, pois poderá causar interferências eletromagnéticas que obrigam o usuário a tomar medidas necessárias para minimizar estas interferências."

Para maiores informações, consulte o site da ANATEL www.gov.br/anatel/pt-br/

Korea Certification (KC) – Korea

A급 기기 (업무용 방송통신기자재)
이 기기는 업무용(A급) 전자파적합기기로서 판매자 또는 사용자는 이 점을 주의하시기를 바라며, 가정외의 지역에서 사용하는 것을 목적으로 합니다.

Fortinet Customer Service and Support

Create a support account, register and manage your products, download updates, firmware images and release notes, and create technical support tickets.
https://support.fortinet.com

Fortinet Document Library

Up-to-date versions of Fortinet publications for the entire family of Fortinet products.
http://docs.fortinet.com

Training Services

Course descriptions, availability, schedules, and location of training programs in your area.
http://www.fortinet.com/training

Technical Discussion Forums

Communicate with other customers and Fortinet partners about Fortinet products, services, and configuration issues.
https://support.fortinet.com/forum

FortiGuard Threat Research and Response

Up-to-date information on vulnerabilities and threats, includes a virus scanner, IP signature look-up, and web filtering tools.
http://www.fortiguard.com

Fortinet.com