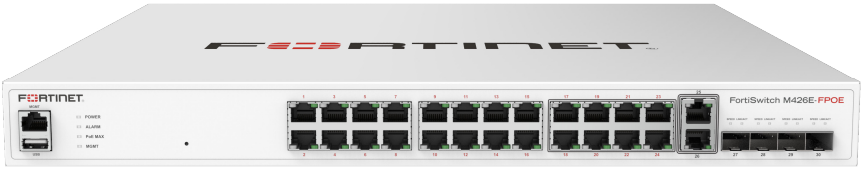

FortiSwitch M426E-FPOE

QuickStart Guide

February 05, 2026

This guide covers: FS-M426E-FPOE

Copyright © 2026 Fortinet, Inc. All rights reserved. Fortinet®, FortiGate®, FortiCare® and FortiGuard®, and certain other marks are registered trademarks of Fortinet, Inc., and other Fortinet names herein may also be registered and/or common law trademarks of Fortinet. All other product or company names may be trademarks of their respective owners. Performance and other metrics contained herein were attained in internal lab tests under ideal conditions, and actual performance and other results may vary. Network variables, different network environments and other conditions may affect performance results. Nothing herein represents any binding commitment by Fortinet, and Fortinet disclaims all warranties, whether express or implied, except to the extent Fortinet enters a binding written contract, signed by Fortinet's SVP Legal and above, with a purchaser that expressly warrants that the identified product will perform according to certain expressly-identified performance metrics and, in such event, only the specific performance metrics expressly identified in such binding written contract shall be binding on Fortinet. For absolute clarity, any such warranty will be limited to performance in the same ideal conditions as in Fortinet's internal lab tests. Fortinet disclaims in full any covenants, representations, and guarantees pursuant hereto, whether express or implied. Fortinet reserves the right to change, modify, transfer, or otherwise revise this publication without notice, and the most current version of the publication shall be applicable.

For Product License Agreement / EULA and Warranty Terms, visit https://www.fortinet.com/content/dam/fortinet/assets/legal/EULA.pdf

Box Includes

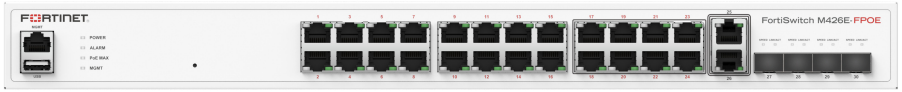

FortiSwitch M426E-FPOE

QuickStart Guide

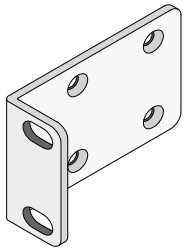

2x Rack-Mount Brackets

2x Power Cable

8x Bracket Screws

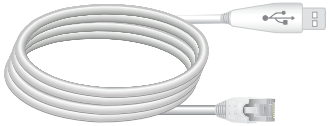

1x Console Cable
(USB to RJ45)

4x Rubber Feet

Port Descriptions

Ethernet Ports 17 to 24 (RJ-45)
2.5 Gigabit Ethernet ports

Ethernet Ports 25 to 26 (RJ-45)
5 Gigabit Ethernet ports

Front Faceplate

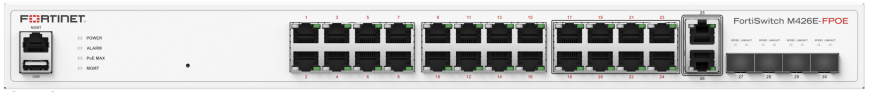

MGMT (RJ-45)
Client port for management
Default IP address is 192.168.1.99

Ethernet Ports 1 to 16 (RJ-45)
Gigabit Ethernet ports

USB (USB A)
USB 2.0 Port

Ports 27 to 30 (SFP+)
10Gbps SFP+ Ports

Note: Ports 1 to 16 are 802.3af/at. Ports 17 to 24 are 802.3af/at/4-pair 60W

Rear Faceplate

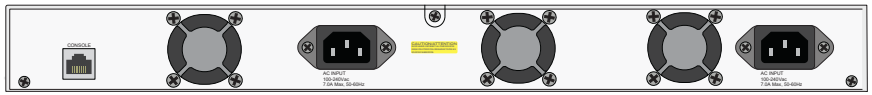

Console (RJ-45)
Optional connection to the management computer. Provides access to the CLI.

Redundant Power Supplies
100-240V AC, 7.0A, 50/60Hz

Port Guide

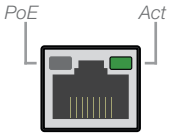

Ethernet Ports Activity
- Green: Connected
- Flashing Green: Transmit and receive
- Off: No link established

PoE Ports 1 to 24
- Amber: Providing power
- Off: Not providing power

Ethernet Ports Speed 25 to 26
- Green: 5Gbps/1000Mbps/100Mbps
- Amber: 2.5Gbps
- Off: no link

FortiSwitch M426E-FPOE

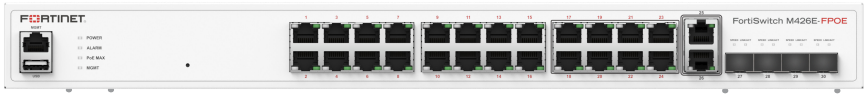

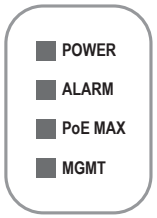

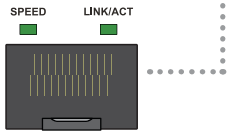

Power
- Green: The unit is on
- Off: The unit is off

Alarm
- Amber: The unit has a fault
- Off: No faults detected

PoE MAX
- Amber: Max output power budget reached
- Off: PoE power available

MGMT
- Green: Connected
- Flashing Green: Transmitting and receiving data
- Off: No link established

SFP+ Ports Link/Activity
- Green: Connected
- Flashing Green: Transmit and receive
- Off: No link established

SFP+ Ports Speed
- Green: 10Gbps
- Amber: 1Gbps

Device Installation

The FortiSwitch unit can be placed on any flat surface, or mounted in any standard 19 inch rack unit with the provided rack-mount brackets and screws.

Please read "Ethernet Ports 1 to 16" *prior to installing your device.*

Caution: Electrostatic discharge (ESD) can damage your Fortinet equipment.

Do not place heavy objects on the unit.

To avoid personal injury or damage to the unit, it is recommended that two or more people install the unit into the rack.

Note: If the unit has a redundant power supply, each power cable should be connected to a different power source. In this way, if one power source fails, the other may still be operational and the unit will not lose power.

To install the FortiSwitch unit into a rack

1. Ensure that the FortiSwitch unit is placed on a stable surface prior to rack-mount installation.
2. Attach the provided rack-mount brackets to the sides of the unit using the provided bracket screws.

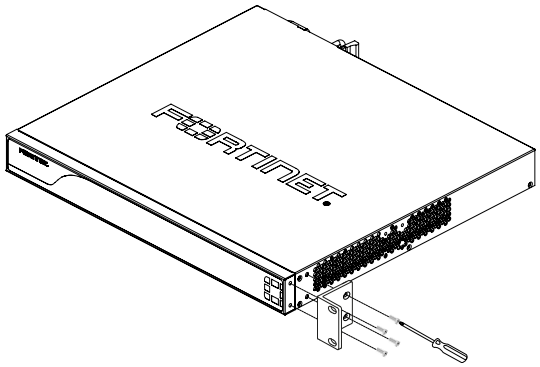

3. Position the FortiSwitch unit in the rack. Ensure there is enough room around the unit to allow for sufficient air flow.

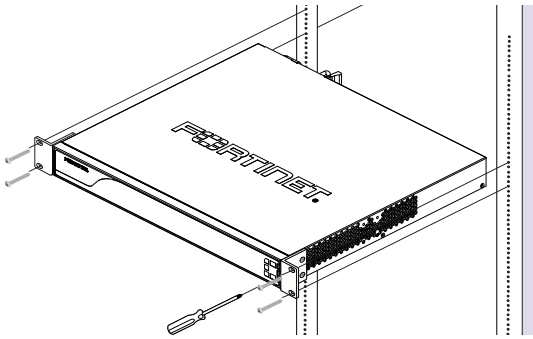

4. Line up the rack-mount bracket holes to the holes on the rack and ensure that the FortiSwitch unit is level.
5. Finger tighten four rack-mount screws to attach the unit to the rack.
6. Verify that the spacing around the FortiSwitch unit conforms to requirements and that the unit is level, then tighten the rack-mount screws with an appropriate screwdriver.
7. Plug the provided power cable into the rear of the unit, and then into a grounded electrical outlet or a separate power source such as an uninterruptible power supply (UPS) or a power distribution unit (PDU).

To install the unit on a flat surface

1. Ensure that the surface onto which the FortiSwitch unit to be installed is clean, level, and stable and that there is at least 1.5in (3.8cm) of clearance on all sides to allow for adequate airflow.
2. Attach the provided rubber feet to the bottom of the FortiSwitch unit.

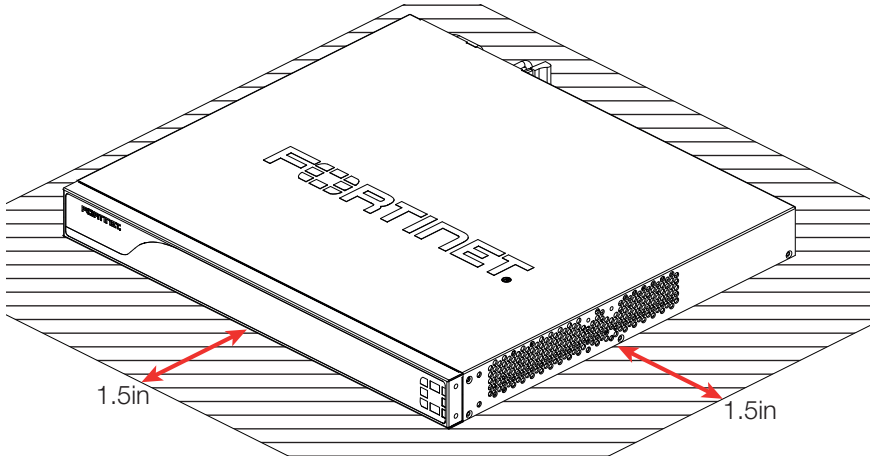

3. Place the unit in the designated location.
4. Verify that the spacing around the FortiSwitch unit conforms to requirements and that the unit is level.
5. Plug the provided power cable into the rear of the unit, and then into a grounded electrical outlet or a separate power source such as an uninterruptible power supply (UPS) or a power distribution unit (PDU).

SFP Transceivers

Caution: SFP transceivers are static sensitive devices. Use an ESD wrist strap or similar grounding device when handling transceivers.

Do not install or remove SFP transceivers while fiber-optic cables are still attached. This can cause damage to the cables, cable connectors, and the optical interfaces. It may also prevent the transceiver from latching correctly into the socket connector.

Note: Installing and removing SFP transceivers can shorten their useful life. Do not install or remove transceivers more than is necessary.

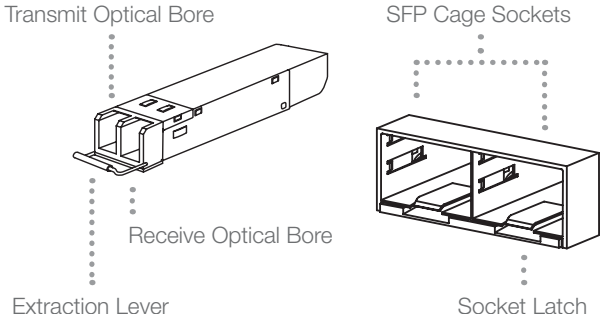

To install the SFP transceivers

1. Ensure that you are properly grounded.
2. Remove the caps from the SFP cage sockets on the front panel of the unit.
3. Position the SFP transceiver in front of the cage socket opening and ensure that the transceiver is correctly oriented. When the transceiver is correctly oriented, the extraction lever will be level with the socket latch.
   Note: SFP cage socket orientation may vary. Ensure that the SFP transceiver module is correctly oriented each time that you are inserting a transceiver.
4. Hold the sides of the SFP transceiver and slide it into the cage socket until it clicks into place.

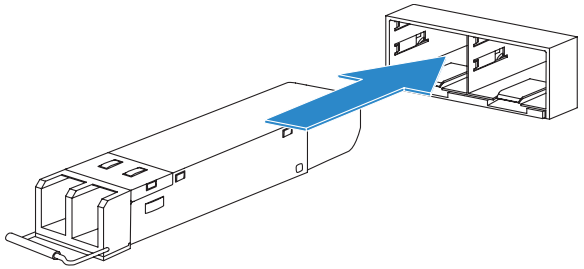

5. Press the transceiver firmly into the cage socket with your thumb.
6. Verify that the transceiver is latched correctly by grasping the sides of the transceiver and trying to pull it out without lowering the extraction lever.
   If the transceiver cannot be removed, it is installed and latched correctly.
   If the transceiver can be removed, reinsert it and press harder with your thumb.
   If necessary, repeat this process until the transceiver is securely latched into the cage socket.

To remove the SFP transceivers

1. Ensure that you are properly grounded.
2. If applicable, disconnect the fiber-optic cable from the transceiver connector and install a clean dust plug in the transceiver's optical bores.
3. Pull the extraction lever out and down to eject the transceiver. If you are unable to use your finger to open the lever, use a small flat-head screwdriver or other similar tool to open the lever.
4. Hold the sides of the transceiver and carefully pull it away from the cage socket.

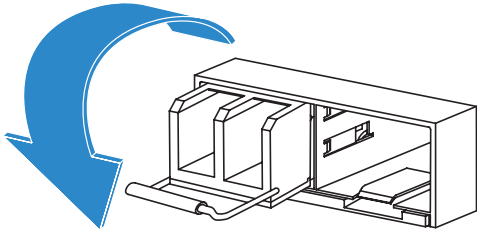

5. Replace the cap on the SFP cage socket and place the removed SFP transceiver into an antistatic bag.

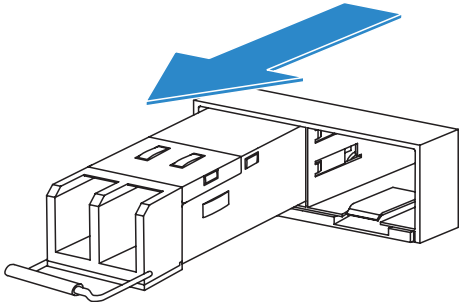

Caution: Do not force the SFP transceivers into the cage slots. If the transceiver does not easily slide in and click into place, it may not be aligned correctly or may be upside down. If this happens, remove the SFP transceiver, realign it or rotate it and slide it in again.

Note: Follow proper fiber-optic handling procedures when installing and removing SFP transceivers to ensure the devices remain clean and are not damaged.

Internet Connection

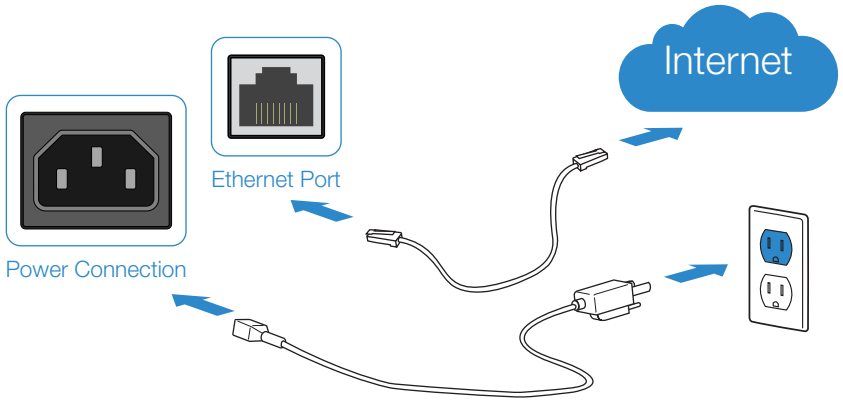

Connect your device to a power outlet and an Internet connection. This is usually a modem, but could also be another device on your network.

Note: If the unit has a redundant power supply, each power cable should be connected to a different power source. In this way, if one power source fails, the other may still be operational and the unit will not lose power.

GUI

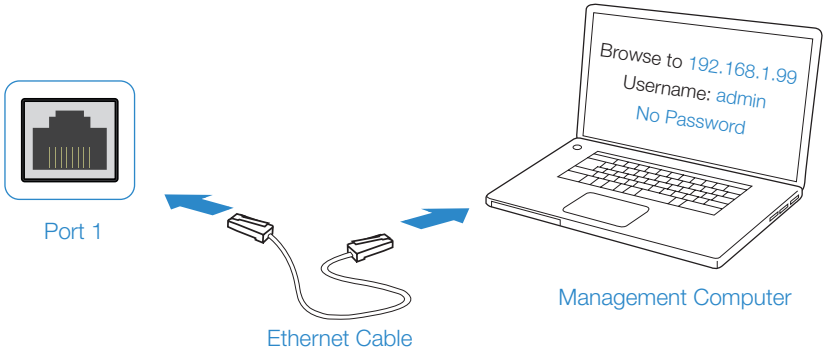

1. Connect port 1 to the Management Computer using the supplied Ethernet cable.
2. Enable DHCP or set the Management Computer's IP and subnet to:

   Static IP Address: 192.168.1.1
   Subnet Mask: 255.255.255.0

3. Visit 192.168.1.99 in a web browser.
4. Log in with the username admin and no password.
5. You can now configure your FortiSwitch.

Note: After you log in for the first time, you will be prompted to set a new password.

CLI

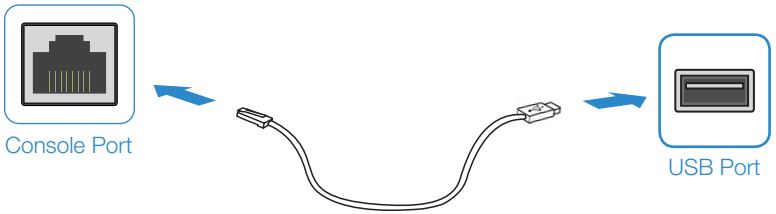

1. Connect the Console Port with a Console Cable to the Serial Port on the Management Computer.

2. Start a terminal program on the Management Computer and select an available. COM Port using the following default settings:

   Baud rate: 115200
   Data bits: 8
   Parity: None
   Stop bits: 1
   Flow control: None

3. Log in using username admin and no password.

4. You can now configure your FortiSwitch.

Note: After you log in for the first time, you will be prompted to set a new password.

FortiLink

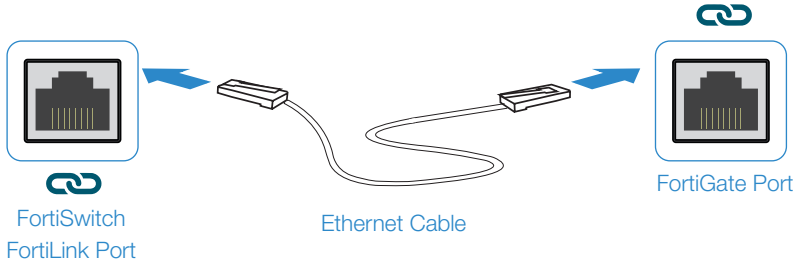

1. Connect a FortiSwitch FortiLink Port directly using an Ethernet Cable to a FortiGate FortiLink Port or any FortiGate Port that is not an HA port.

2. Login to the FortiGate and go to the WiFi and Switch Controller --> FortiLink Interface.

3. Add a FortiGate Port in the FortiLink interface and choose Automatically authorize devices.

4. When the FortiSwitch is online in the WiFi and Switch Controller --> Managed FortiSwitch section, you can now manage your FortiSwitch.

Cloud Management

(Connect a port to the Internet)

1. Visit support.fortinet.com to register your device and cloud management license.

2. Sign in at https://fortiedge.forticloud.com to manage your Inventory List.

Cautions and Warnings

Environmental Specifications

Ambient operating temperature: 0°C to 45°C

Refer to specific Product Model Data Sheet for Environmental Specifications (Operating Temperature, Storage Temperature, Humidity, and Altitude)

Référez à la Fiche Technique de ce produit pour les caractéristiques environnementales (Température de fonctionnement, température de stockage, humidité et l'altitude).

Safety

Caution: This equipment is to be used in a Network Environment 0 per IECTR 62101. This product is connected only to PoE networks without routing to the outside plant.

Attention: Ce matériel doit être utilisé dans un Environnement Réseau 0 par IECTR 62101. Ce produit est uniquement connecté aux réseaux PoE sans installation externe de routage.

Regulatory Notices

Federal Communication Commission (FCC) – USA

This device complies with Part 15 of the FCC Rules. Operation is subject to the following two conditions:
(1) this device may not cause harmful interference, and
(2) this device must accept any interference received; including interference that may cause undesired operation.

This equipment has been tested and found to comply with the limits for a Class A digital device, pursuant to Part 15 of the FCC Rules. These limits are designed to provide reasonable protection against harmful interference when the equipment is operated in a commercial environment. This equipment generates, uses, and can radiate radio frequency energy, and if it is not installed and used in accordance with the instruction manual, it may cause harmful interference to radio communications. Operation of this equipment in a residential area is likely to cause harmful interference, in which case the user will be required to correct the interference at his own expense.

WARNING: Any changes or modifications to this product not expressly approved by the party responsible for compliance could void the user's authority to operate the equipment

Industry Canada Equipment Standard for Digital Equipment (ICES) – Canada

CAN ICES-3 (A) / NMB-3 (A)

This digital apparatus does not exceed the Class A limits for radio noise emissions from digital apparatus set out in the Radio Interference Regulations of the Canadian Department of Communications.

Cet appareil numérique n'émet pas de bruits radioélectriques dépassant les limites applicables aux appareils numériques de la classe A prescrites dans le Règlement sur le brouillage radioélectrique édicte par le ministère des Communications du Canada

European Conformity (CE) - EU

This is a Class A product. In a domestic environment, this product may cause radio interference, in which case the user may be required to take adequate measures.

CE

Voluntary Control Council for Interference (VCCI) – Japan

この装置は、クラスＡ機器です。この装置を住宅環境で使用すると電波妨害を引き起こすことがあります。この場合には使用者が適切な対策を講ずるよう要求されることがあります。

ＶＣＣＩ－Ａ

Product Safety Electrical Appliance & Material (PSE) – Japan

日本では電気用品安全法(PSE)の規定により、同梱している電源コードは本製品の専用電源コードとして利用し、他の製品に使用しないでください。

Bureau of Standards Metrology and Inspection (BSMI) – Taiwan

限用物質含有情況表 (RoHS Table) 請到以下 網址下載:
https://www.fortinet.com/bsmi

警告: 為避免電磁干擾，本產品不應安裝或使用於住宅環境。

請仔細閱讀以下說明
本設備勿置於潮濕處。
連接至電源前，請先檢查電壓。
當設備不用時，請將所有電源線拔除，避免電壓不穩而造成傷害。
勿將任何液體灌入設備中，避免線路短路。
基於安全理由，只有受到專業訓練的從業人員，才可以打開本設備。
請勿自行調整或修理已通電的設備，以確保您的安全。
如不小心受傷，請立刻找急救人員給予您適當的救護，千萬別因傷勢輕微而忽略自己的傷勢。

請依照台灣法規處置電池。
若不正確替換電池可能導致爆炸危險，替換電池時，請使用設備生產商推薦使用的電池。
請勿拆卸、刺穿或以其他方式損壞電池。

英屬蓋曼群島商防特網股份有限公司台灣分公司
地址：台北市內湖區行愛路176號2樓
電話：(02) 27961666

Register for Support

To download up-to-date FortiSwitch documentation, visit:

https://docs.fortinet.com/product/fortiswitch

For Technical Support and Registration, visit:

https://support.fortinet.com

For all other inquires, please contact us:

https://support.fortinet.com
Toll free: 1 866 648 4638
Phone: 1 408 486 7899
Fax: 1 408 235 7737
Email: register@fortinet.com

Register your Fortinet product to receive:
- Technical Support
- New product features
- Protection from new threats

Vous devez enregistrer le produit pour recevoir:
- Support technique
- Nouvelles fonctionnalitées du produit
- Protection contre de nouvelles menaces

La reistrazione ti permette di usufruire di:
- Supporto Tecnico
- Nuove funzionalita
- Proteezione dalle ultime minaccce

Debe registrar el producto para recibir:
- Apoyo técnico
- Nuevas funcionalidades del producto
- Protección contra ataques

登録のお願い
本日、フォーティネット製品の登録をしてください。
登録すると次のメリットがあります。
テクニカルサポート・新機能の追加・新しい脅威への防御

请马上注册
您的飞塔产品
您在注册以后才能得到技术支持、新产品特点信息、最新威胁防护

Fortinet Customer Service and Support

Create a support account, register and manage your products, download updates, firmware images and release notes, and create technical support tickets.
https://support.fortinet.com

Fortinet Document Library

Up-to-date versions of Fortinet publications for the entire family of Fortinet products.
http://docs.fortinet.com

Training Services

Course descriptions, availability, schedules, and location of training programs in your area.
http://www.fortinet.com/support/training.html

Technical Discussion Forums

Communicate with other customers and Fortinet partners about Fortinet products, services, and configuration issues.
https://support.fortinet.com/forum

FortiGuard Threat Research and Response

Up-to-date information on vulnerabilities and threats, includes a virus scanner, IP signature look-up, and web filtering tools.
http://www.fortiguard.com

Fortinet.com