# QuickStart Guide

## FortiGate Rugged 50G-5G

FGR-50G-5G

# The Essentials

## Secure our Network

Register at https://support.fortinet.com for the latest threat protection updates

## GUI

❶ Connect Port 1 to an Ethernet port or USB-RJ45 adapter on your computer using the provided Ethernet cable
❷ Open a browser to https://192.168.1.99

## CLI

❶ Connect a console cable (not included) to the Console Port
❷ Open a Terminal app using 9600-8-N-1

## Default Login

OS

**https://192.168.1.99**
**Username: *admin***
**Password: leave blank**

## Fortinet Documents Library

For getting started documentation, admin guides, up-to-date hardware manuals and reference resources, visit https://docs.fortinet.com/

## FortiGate Cloud

Experience simplified cloud provisioning, security analytics, remote access, hosted log retention and reporting at https://fortigate.forticloud.com

## FortiExplorer Go

Rapidly provision, deploy and manage your Fortinet Security Fabric Platform, free on iOS and Android: https://docs.fortinet.com/product/fortiexplorer-go/

GET IT ON Google Play

Download on the App Store

# Package Contents

**FortiGate Rugged 50G-5G**
FGR-50G-5G

1x FortiGate Rugged Device

1x QuickStart Guide

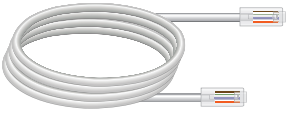

1x CAT5e Ethernet Cable

1x DIN Rail Bracket w/Screws
(4x M3×10)

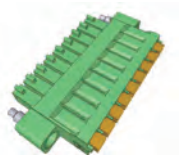

1x Digital I/O Connector

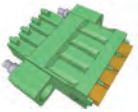

1x DC Power Connector

5x Antennas
(4x WWAN, 1x GPS)

# Power Installation

## Warnings

- The redundant DC inputs support negative ground (+12V to +54V DC) and positive ground (-12V to -54V DC), 2.5A Max
- With the optional failover redundancy, if the primary DC input fails, the secondary DC input will supply power
- DC1+ and DC2+ are the higher voltage potential pins and DC1- and DC2- are the lower voltage potential pins
- Do not connect the DC+ terminal to a lower voltage potential than the DC- terminal
- The voltage between DC+ and DC- must be +12V to +54V DC
- The DC wire gauge maximum is 12 AWG; the minimum is 22 AWG
- Consult a professional electrician to install the device and determine a suitable wire gauge and length

## Connector Pinout

Connect DC1+ or DC2+ on the device terminal block to the DC power source, then connect the negative DC1- or DC2- on the terminal block. Terminal block does not support hot-plugging.

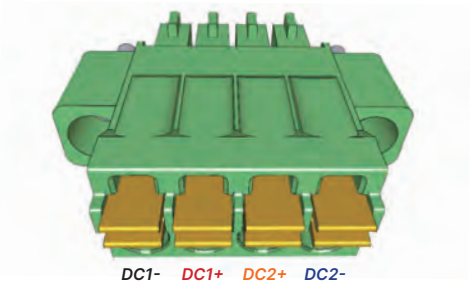


| DC Input Power | DC+ Terminal | DC- Terminal |
|---|---|---|
| Negative Ground | +12V to +54V DC | Ground |
| Positive Ground | Ground | -12V to -54V DC |

## Wiring

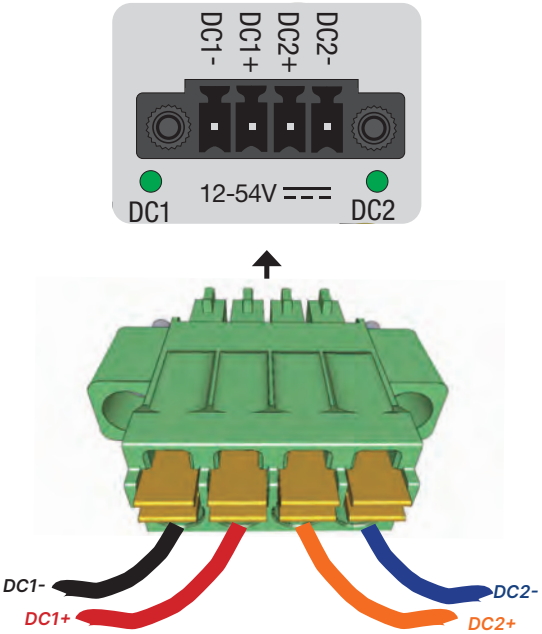


## Grounding

Optional but recommended, connect earth ground using the grounding screw.

# Dimensions

**NOTE:** Drawings are for dimensional purposes only. Refer to pg14 for connector details.

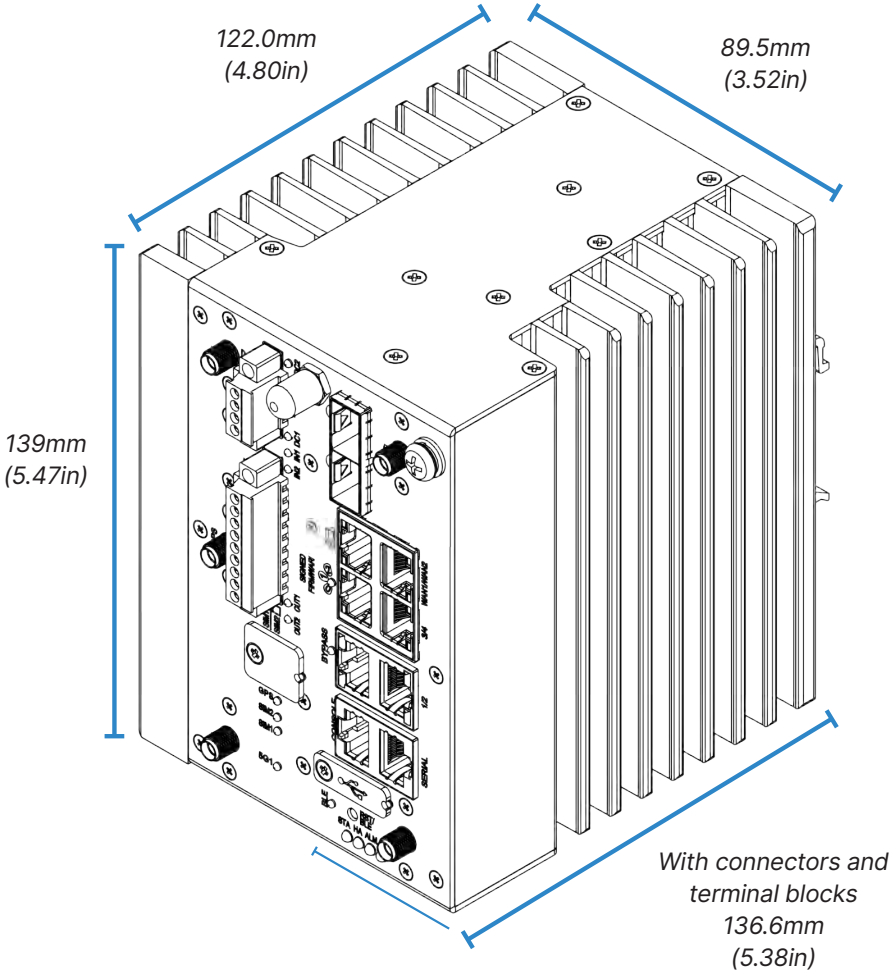

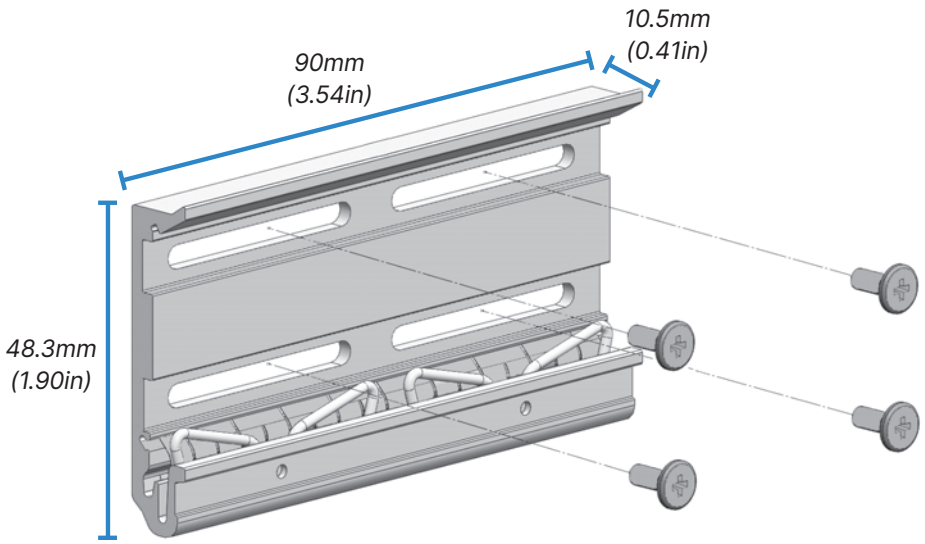
10.5mm
(0.41in)
90mm
(3.54in)
48.3mm
(1.90in)

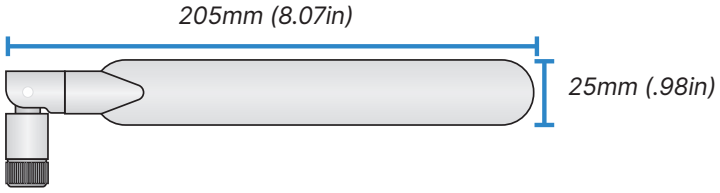
205mm (8.07in)
25mm (.98in)

# Mounting

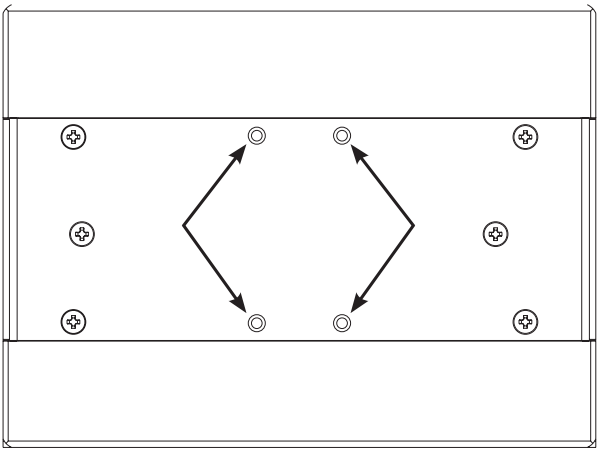

**Rear Mounting Holes**

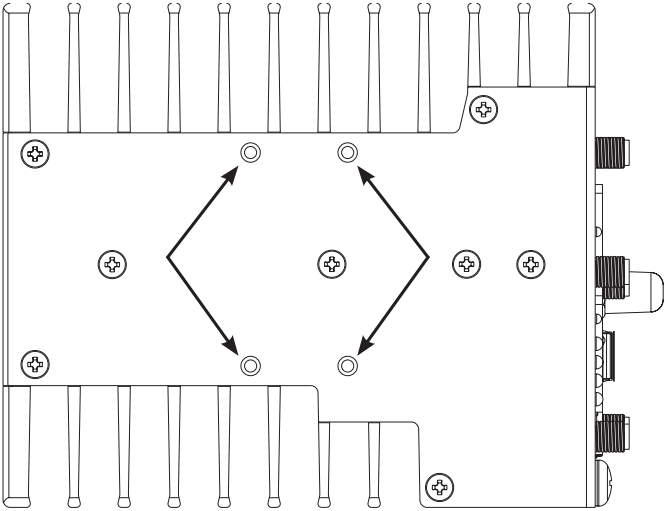

**Side Mounting Holes**

# Digital I/O Connector

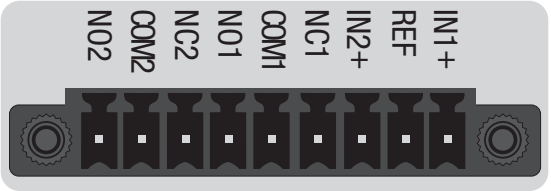


| Connector | Description |
|---|---|
| NO2 | Normally Open 2 Terminal |
| COM2 | Common 2 Terminal |
| NC2 | Normally Closed 2 Terminal |
| NO1 | Normally Open Terminal |
| COM1 | Common 1 Terminal |
| NC1 | Normally Closed 1 Terminal |
| IN2+ | Alarm Input 2 |
| REF | Alarm Input 1/2 Reference Ground |
| IN1+ | Alarm Input 1 |

# 5G Nano SIM Slot

SIM type is 4FF - Nano SIM. Industrial SIM card recommended for extreme temperature environments. Refer to the datasheet for supported operating temperatures. For wireless configuration, visit https://docs.fortinet.com

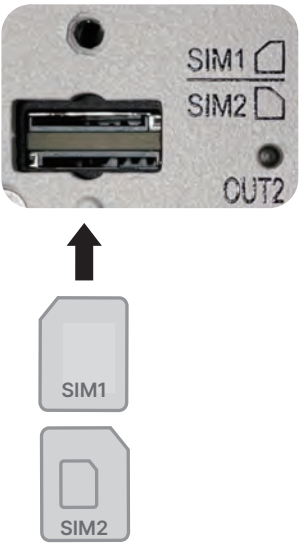

# Antenna Installation

Attach the supplied five antennas to: ANT0, ANT1, ANT2, ANT3, & GPS.

# Setup

## FortiExplorer Go

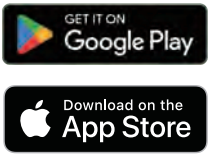


Install
FortiExplorer Go

Enable
Bluetooth

Follow the on-screen
instructions

## GUI

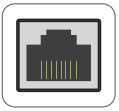

Ports 1-4

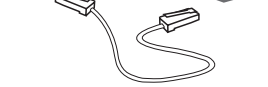

Ethernet Cable

If Static IP: 192.168.1.1/24

# CLI

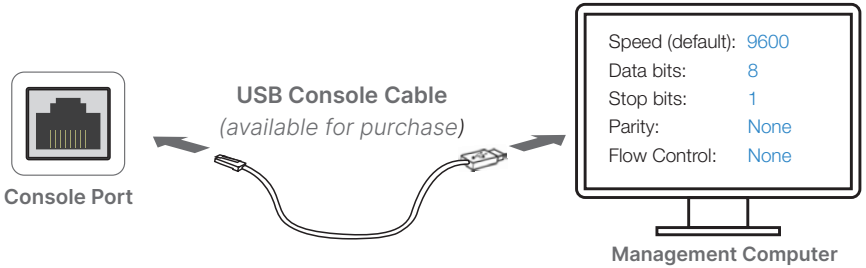
Console Port
USB Console Cable
(available for purchase)
Speed (default): 9600
Data bits: 8
Stop bits: 1
Parity: None
Flow Control: None
Management Computer

# Front FGR-50G-5G

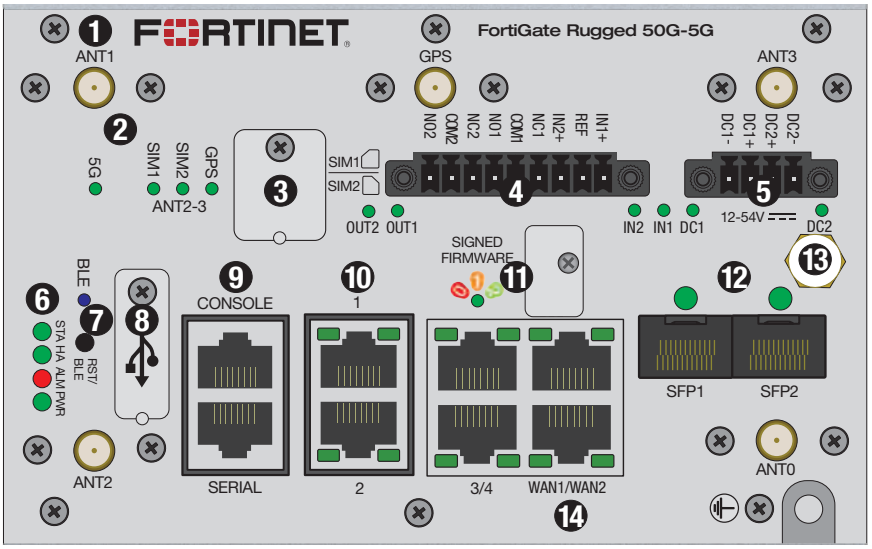


**1 Antenna Connector (5x SMA)**

**2 5G1**

- **Green**: 5G connected
- **Amber**: 4G/3G connected
- **Off**: Not connected

**SIM1, SIM2**

- **Green**: Detected
- **Off**: Not detected

**GPS**

- **Green**: On
- **Off**: Off

**3 5G SIM slots (2x Nano 4FF)**

**4 Alarm Inputs (IN1, IN2)**

- **Green**: Alarm defined
- **Red**: Alarm detected
- **Off**: Alarm not defined

**Alarm Output (OUT1, OUT2)**

- **Green**: Alarm defined
- **Flashing Red**: Major alarm detected
- **Red**: Minor alarm detected
- **Off**: Alarm not defined

**5 Power Connector (DC1, DC2)** Alarm disabled by default

- **Green**: Power detected
- **Red**: Alarm is on; no power detected
- **Off**: No power detected

**6 STA**

- **Green**: Operating normally
- **Flashing Green**: Reset window
- **Red**: Device error
- **Off**: Device is off

**HA**

- **Green**: HA enabled (normal)
- **Red**: HA enabled (failover)
- **Off**: HA disabled

**ALM**

- **Red**: Major alarm detected
- **Amber**: Minor alarm detected
- **Off**: No alarm detected

**PWR**

- **Green**: Power detected
- **Off**: Power not detected

**7 RST / BLE** Press to enable BLE; press and hold for system reset during STA reset window

- **Blue**: BLE connected
- **Flashing Blue**: BLE in discovery
- **Off**: BLE off

**8 USB 2.0 port**

**9 CONSOLE (RJ45)** CLI management

**SERIAL (RJ45)** Data port

**10 Ports 1 to 4 (RJ45)**

**Speed (Left LED)**

- **Green**: 1 Gbps
- **Amber**: 100 Mbps
- **Off**: 10 Mbps or not connected

**Activity/Link (Right LED)**

- **Green**: Link established
- **Flashing Green**: Data activity
- **Off**: No link established

**11 Signed Firmware** BIOS Security Level

Controlled by Signed Firmware Switch, see Admin Guide at https://docs.fortinet.com

- **Green**: Security Level 2 (default)
- **Amber**: Security Level 1
- **Red**: Security Level 0

**12 SFP1 & SFP2 (SFP)**

- **Green**: Link established
- **Flashing Green**: Data activity
- **Off**: No link established

**13 BLE Antenna**

**14 WAN1 (Top) & WAN2 (Bottom) (RJ45)**

**Speed (Left LED)**

- **Green**: 1 Gbps
- **Amber**: 100 Mbps
- **Off**: 10 Mbps or not connected

**Activity/Link (Right LED)**

- **Green**: Link established
- **Flashing Green**: Data activity
- **Off**: No link established

# Cautions and Warnings

## Environmental specifications

Ambient operating temperature: -40°C to 75°C

*Refer to specific Product Model Data Sheet for Environmental Specifications (Operating Temperature, Storage Temperature, Humidity, and Altitude)*
*Référez à la Fiche Technique de ce produit pour les caractéristiques environnementales (Température de fonctionnement, température de stockage, humidité et l'altitude).*

## Safety

**Warning:** Equipment intended for installation in Restricted Access Location.
**Avertissement:** Le matériel est conçu pour être installé dans un endroit où l'accès est restreint.

A skilled person must install the equipment.
L'équipement doit être installé par une personne qualifiée.

**Warning**: A readily accessible disconnect device shall be incorporated in the building installation wiring.
**Avertissement**: Un dispositif de déconnexion facilement accessible doit être incorporé dans l'installation électrique du bâtiment.

**Warning**: A UL Listed external disconnect device, i.e. circuit breaker or other, with over current protection suitable for local code(rated 15A recommended) shall be installed with this equipment
**Avertissement**: Un dispositif de déconnection externe homologué UL, exemple d'un disjoncteur ou autre, avec des protections de surintensité appropriées (nominal 15A recommandé) à l'installation de ce matériel.

**CAUTION**: Shock Hazard. Disconnect all power sources.
**ATTENTION**: Risque d'électrocution. Débranchez toutes les sources d'alimentation.

**Grounding —** To prevent damage to your equipment, connections that enter from outside the building should pass through a lightning / surge protector, and be properly grounded. Use an electrostatic discharge workstation (ESD) and/or wear an anti-static wrist strap while you work. In addition to the grounding terminal of the plug, on the back panel, there is another, separate terminal for earthing.

**Mise à la terre —** Pour éviter d'endommager votre matériel, assurez-vous que les branchements qui entrent à partir de l'extérieur du bâtiment passent par un parafoudre / parasurtenseur et sont correctement mis à la terre. Utilisez un poste de travail de décharge électrostatique (ESD) et / ou portez un bracelet anti-statique lorsque vous travaillez. Ce produit possède une borne de mise à la terre qui est prévu à l'arrière du produit, à ceci s'ajoute la mise à la terre de la prise.

This product has a separate protective earthing terminal provided on the back of the product in addition to the grounding terminal of the attachment plug. This separate protective earthing terminal must be permanently connected to earth with a green with yellow stripe conductor minimum size # 20 AWG and the connection is to be installed by a qualified service personnel.
Ce produit a une borne de mise à la terre séparé sur le dos de l'appareil, en plus de la borne de mise à la terre de la fiche de raccordement. Cette borne de mise à la terre séparée doit être connecté en permanence à la terre avec un conducteur vert avec la taille bande jaune de minimum # 20 AWG et la connexion doit être installé par un personnel qualifié.

Connect to NEC Class 2 power source
Connectez-vous à une source d'alimentation NEC Classe 2

# Regulatory Notices

## Federal Communication Commission (FCC) – USA

This device complies with Part 15 of the FCC Rules. Operation is subject to the following two conditions:
(1) this device may not cause harmful interference, and
(2) this device must accept any interference received; including interference that may cause undesired operation.

This equipment has been tested and found to comply with the limits for a Class A digital device, pursuant to Part 15 of the FCC Rules. These limits are designed to provide reasonable protection against harmful interference when the equipment is operated in a commercial environment. This equipment generates, uses, and can radiate radio frequency energy, and if it is not installed and used in accordance with the instruction manual, it may cause harmful interference to radio communications. Operation of this equipment in a residential area is likely to cause harmful interference, in which case the user will be required to correct the interference at his own expense.

**WARNING**: Any changes or modifications to this product not expressly approved by the party responsible for compliance could void the user's authority to operate the equipment

This equipment complies with FCC radiation exposure limits set forth for an uncontrolled environment. This equipment should be installed and operated with minimum distance 20cm between the radiator and your body. This transmitter must not be co-located or operating in conjunction with any other antenna or transmitter.

## Industry Canada Equipment Standard for Digital Equipment (ICES) – Canada

CAN ICES-003 (A) / NMB-003 (A)

This digital apparatus does not exceed the Class A limits for radio noise emissions from digital apparatus set out in the Radio Interference Regula¬tions of the Canadian Department of Communications.

Cet appareil numérique n'émet pas de bruits radioélectriques dépassant les limites applicables aux appareils numériques de la classe A prescrites dans le Règlement sur le brouillage radioélectrique édicte par le ministère des Communications du Canada.

## Innovation, Science and Economic Development (ISED) – Canada

This device contains licence-exempt transmitter(s)/receiver(s) that comply with Innovation, Science and Economic Development Canada's licence-exempt RSS(s). Operation is subject to the following two conditions:
1. This device may not cause interference.
2. This device must accept any interference, including interference that may cause undesired operation of the device.

L'émetteur/récepteur exempt de licence contenu dans le présent appareil est conforme aux CNR d'Innovation, Sciences et Développement économique Canada applicables aux appareils radio exempts de licence. L'exploitation est autorisée aux deux conditions suivantes:
1. L'appareil ne doit pas produire de brouillage;
2. L'appareil doit accepter tout brouillage radioélectrique subi, même si le brouillage est susceptible d'en compromettre le fonctionnement.

This equipment complies with ISED radiation exposure limits set forth for an uncontrolled environment. This equipment should be installed and operated with minimum distance 20cm between the radiator & your body.

Cet équipement est conforme aux limites d'exposition aux rayonnements ISED établies pour un environnement non contrôlé. Cet équipement doit être installé et utilisé avec un minimum de 20cm de distance entre la source de rayonnement et votre corps.

This radio transmitter (IC: 7280B-21001T57) has been approved by ISED to operate with the antenna types listed below with the maximum permissible gain and required antenna impedance for each antenna type indicated. Antenna types not included in this list, having a gain greater than the maximum gain indicated for that type, are strictly prohibited for use with this device.

Le présent émetteur radio (IC: 7280B-21001T57) a été approuvé par ISED pour fonctionner avec les types d'antenne énumérés ci-dessous et ayant un gain admissible maximal et l'impédance requise pour chaque type d'antenne. Les types d'antenne non inclus dans cette liste, ou dont le gain est supérieur au gain maximal indiqué, sont strictement interdits pour l'exploitation de l'émetteur.

This device and it's antennas(s) must not be co-located or operating in conjunction with any other antenna or transmitter except in accordance with IC multi-transmitter product procedures.

Cet appareil et son antenne (s) ne doit pas être co-localisés ou fonctionnement en association avec une autre antenne ou transmetteur.

| Antenna type | Connector | Gain (dBi) | Network |
|---|---|---|---|
| Monopole | I-PEX | 1.53 | Bluetooth |

## European Conformity (CE) - EU

This is a Class A product. In a domestic environment, this product may cause radio interference, in which case the user may be required to take adequate measures.

The product transmits within the frequency ranges and less than or equal to the power listed below:

| Standard | Frequency Range | Max. Transmit Power |
|---|---|---|
| Bluetooth | 2402–2480 MHz | 10 dBm (EIRP) |

| Standard | Frequency Range | Transmit Power |
|---|---|---|
| WCDMA | Band 1: 1920-1980MHz(Uplink); 2110-2170MHz(Downlink)<br>Band 8: 880-915MHz(Uplink);925-960MHz(Downlink) | 24 dBm (Conducted) |
| LTE | Band 1: 1920-1980MHz(Uplink); 2110-2170MHz(Downlink)<br>Band 3: 1710-1785MHz(Uplink); 1805-1880MHz(Downlink)<br>Band 7: 2500-2570MHz(Uplink); 2620-2690MHz(Downlink)<br>Band 8: 880-915MHz(Uplink);925-960MHz(Downlink)<br>Band 20: 832-862MHz(Uplink); 791-821MHz(Downlink)<br>Band 28: 703-748MHz(Uplink); 758-803MHz(Downlink)<br>Band 34: 2010-2025MHz<br>Band 38: 2570-2620MHz<br>Band 40: 2300-2400MHz<br>Band 41: 2496-2690MHz<br>Band 42: 3400-3600MHz<br>Band 43: 3600-3800MHz | 24 dBm (Conducted) |
| | Band 41: 2496-2690MHz | 27 dBm (Conducted) |
| 5G NR | n1: 1920-1980MHz(Uplink); 2110-2170MHz(Downlink)<br>n3: 1710-1785MHz(Uplink); 1805-1880MHz(Downlink)<br>n7: 2500-2570MHz(Uplink); 2620-2690MHz(Downlink)<br>n8: 880-915MHz(Uplink);925-960MHz(Downlink)<br>n20: 832-862MHz(Uplink); 791-821MHz(Downlink)<br>n28: 703-748MHz(Uplink); 758-803MHz(Downlink)<br>n38: 2570-2620MHz<br>n40: 2300-2400MHz<br>n41: 2496-2690MHz<br>n77: 3300-4200MHz<br>n78: 3300-3800MHz | 24 dBm (Conducted) |
| | n41: 2496-2690MHz<br>n77: 3300-4200MHz<br>n78: 3300-3800MHz | 29 dBm (Conducted) |

This equipment should be installed and operated with minimum distance 20cm between the radiator & your body.

## Simplified EU Declaration of Conformity

This declaration is only valid for Fortinet products (including combinations of software, firmware and hardware) provided by Fortinet or Fortinet's authorized partners to the end-customer directly for use within the EU or countries that have implemented the EU Directives and/or spectrum regulation. Any Fortinet products not obtained directly from Fortinet or Fortinet's authorized partners may not comply with EU Directives and Fortinet makes no assurances for such products.

**Български**
Този продукт е в съответствие с Директива 2014/53/ЕС.

**Česky**
Tento produkt je v souladu se směrnicí 2014/53/EU.

**Dansk**
Dette produkt er i overensstemmelse med direktiv 2014/53/EU.

**Deutsch**
Dieses Produkt entspricht der Richtlinie 2014/53/EU.

**Eesti**
See toode vastab direktiivile 2014/53/EL.

**English**
This product is in compliance with Directive 2014/53/EU.

**Español**
Este producto cumple con la Directiva 2014/53/UE.

**Ελληνική**
Το προϊόν αυτό συμμορφώνεται με την Οδηγία 2014/53/ΕΕ.

**Français**
Ce produit est conforme à la Directive 2014/53/UE.

**Hrvatski**
Ovaj proizvod je u skladu s Direktivom 2014/53/EU.

**Italiano**
Questo prodotto è conforme alla Direttiva 2014/53/EU.

**Latviski**
Šis produkts atbilst Direktīvai 2014/53/ES.

**Lietuvių**
Šis gaminys atitinka direktyvą 2014/53/ES.

**Malti**
Dan il-prodott huwa konformi mad-Direttiva 2014/53/UE.

**Magyar**
Ez a termék megfelel a 2014/53/EU irányelvnek.

**Nederlands**
Dit product is in overeenstemming met Richtlijn 2014/53/EU.

**Norsk**
Dette produktet er i samsvar med direktiv 2014/53/EU.

**Polski**
Ten produkt jest zgodny z dyrektywą 2014/53/UE.

**Português**
Este produto está em conformidade com a Diretiva 2014/53/UE.

**Rumunski**
Acest produs este în conformitate cu Directiva 2014/53/UE.

**Slovensky**
Tento produkt je v súlade so smernicou 2014/53/EÚ.

**Slovensko**
Ta izdelek je v skladu z Direktivo 2014/53/EU.

**Suomi**
Tämä tuote on direktiivin 2014/53/EU mukainen.

**Svenska**
Denna produkt överensstämmer med direktiv 2014/53/EU.

Note: The full Declaration of Conformity for this product is available in the link below:
https://site.fortinet.com/ProductRegulatory/EU

**Waste Electrical and Electronic Equipment (WEEE)**
This symbol means that according to local laws and regulations your product and/or its battery shall be disposed of separately from household waste. When this product reaches its end of life, take it to a collection point designated by local authorities. Proper recycling of your product will protect human health and the environment.

## UK Conformity Assessed (UKCA) – United Kingdom

The product transmits within the frequency ranges and less than or equal to the power listed below:

| Standard | Frequency Range | Max. Transmit Power |
|---|---|---|
| Bluetooth | 2402–2480 MHz | 10 dBm (EIRP) |

| Standard | Frequency Range | Transmit Power |
|---|---|---|
| WCDMA | Band 1: 1920-1980MHz(Uplink); 2110-2170MHz(Downlink)<br>Band 8: 880-915MHz(Uplink);925-960MHz(Downlink) | 24 dBm (Conducted) |
| LTE | Band 1: 1920-1980MHz(Uplink); 2110-2170MHz(Downlink)<br>Band 3: 1710-1785MHz(Uplink); 1805-1880MHz(Downlink)<br>Band 7: 2500-2570MHz(Uplink); 2620-2690MHz(Downlink)<br>Band 8: 880-915MHz(Uplink);925-960MHz(Downlink)<br>Band 20: 832-862MHz(Uplink); 791-821MHz(Downlink)<br>Band 28: 703-748MHz(Uplink); 758-803MHz(Downlink)<br>Band 34: 2010-2025MHz<br>Band 38: 2570-2620MHz<br>Band 40: 2300-2400MHz<br>Band 41: 2496-2690MHz<br>Band 42: 3400-3600MHz<br>Band 43: 3600-3800MHz | 24 dBm (Conducted) |
| | Band 41: 2496-2690MHz | 27 dBm (Conducted) |
| 5G NR | n1: 1920-1980MHz(Uplink); 2110-2170MHz(Downlink)<br>n3: 1710-1785MHz(Uplink); 1805-1880MHz(Downlink)<br>n7: 2500-2570MHz(Uplink); 2620-2690MHz(Downlink)<br>n8: 880-915MHz(Uplink);925-960MHz(Downlink)<br>n20: 832-862MHz(Uplink); 791-821MHz(Downlink)<br>n28: 703-748MHz(Uplink); 758-803MHz(Downlink)<br>n38: 2570-2620MHz<br>n40: 2300-2400MHz<br>n41: 2496-2690MHz<br>n77: 3300-4200MHz<br>n78: 3300-3800MHz | 24 dBm (Conducted) |
| | n41: 2496-2690MHz<br>n77: 3300-4200MHz<br>n78: 3300-3800MHz | 29 dBm (Conducted) |

This equipment should be installed and operated with minimum distance 20cm between the radiator & your body.

This product is in compliance with **Statutory Instrument 1206 Radio Equipment Regulations 2017**

The full Declaration of Conformity for this product is available in the link below:
https://site.fortinet.com/ProductRegulatory/UK

July 4, 2024

Copyright © 2024 Fortinet, Inc. All rights reserved. Fortinet®, FortiGate®, FortiCare® and FortiGuard®, and certain other marks are registered trademarks of Fortinet, Inc., and other Fortinet names herein may also be registered and/or common law trademarks of Fortinet. All other product or company names may be trademarks of their respective owners. Performance and other metrics contained herein were attained in internal lab tests under ideal conditions, and actual performance and other results may vary. Network variables, different network environments and other conditions may affect performance results. Nothing herein represents any binding commitment by Fortinet, and Fortinet disclaims all warranties, whether express or implied, except to the extent Fortinet enters a binding written contract, signed by Fortinet's SVP Legal and above, with a purchaser that expressly warrants that the identified product will perform according to certain expressly-identified performance metrics and, in such event, only the specific performance metrics expressly identified in such binding written contract shall be binding on Fortinet. For absolute clarity, any such warranty will be limited to performance in the same ideal conditions as in Fortinet's internal lab tests. Fortinet disclaims in full any covenants, representations, and guarantees pursuant hereto, whether express or implied. Fortinet reserves the right to change, modify, transfer, or otherwise revise this publication without notice, and the most current version of the publication shall be applicable.

For Product License Agreement / EULA and Warranty Terms, visit https://www.fortinet.com/content/dam/fortinet/assets/legal/EULA.pdf

FGR-50G-5G-QSG-20240704

P29929-01-01