QuickStart Guide

FortiGate Rugged 50G

FGR-50G

The Essentials

Secure your Network

Register at https://support.fortinet.com for the latest threat protection updates

GUI

1. Connect Port 1 to an Ethernet port or USB-RJ45 Ethernet adapter on your computer using the provided Ethernet cable
2. Open a browser to https://192.168.1.99

CLI

1. Connect a console cable (not included) to the Console Port
2. Open a Terminal app using 9600-8-N-1

Default Login

https://192.168.1.99
Username: *admin*
Password: leave blank

Fortinet Documents Library

For getting started documentation, admin guides, up-to-date hardware manuals and reference resources, visit https://docs.fortinet.com/

FortiGate Cloud

Experience simplified cloud provisioning, security analytics, remote access, hosted log retention and reporting at https://fortigate.forticloud.com

FortiExplorer Go

Rapidly provision, deploy and manage your Fortinet Security Fabric Platform, free on iOS and Android: https://docs.fortinet.com/product/fortiexplorer-go/

GET IT ON Google Play

Download on the App Store

Package Contents

FortiGate Rugged 50G
FGR-50G

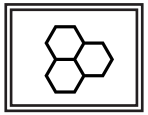

1x FGR-50G

1x QuickStart Guide

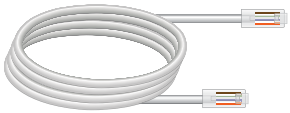

1x CAT5e Ethernet Cable

1x DIN Rail Bracket w/Screws
(4x M3×10)

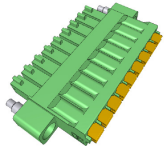

1x Digital I/O Connector

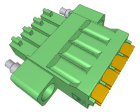

1x DC Power Connector

Power Installation

Warnings

- The redundant DC inputs support negative ground (+12V to +54V DC) and positive ground (-12V to -54V DC), 1.67A Max
- With the optional failover redundancy, if the primary DC input fails, the secondary DC input will supply power
- DC1+ and DC2+ are the higher voltage potential pins and DC1- and DC2- are the lower voltage potential pins
- Do not connect the DC+ terminal to a lower voltage potential than the DC- terminal
- The voltage between DC+ and DC- must be +12V to +54V DC
- The DC wire gauge maximum is 12 AWG; the minimum is 22 AWG
- Consult a professional electrician to install the device and determine a suitable wire gauge and length

Connector Pinout

Connect DC1+ or DC2+ on the device terminal block to the DC power source, then connect the negative DC1- or DC2- on the terminal block. Terminal block does not support hot-plugging.

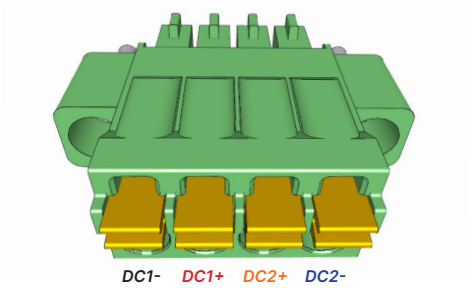

DC Input Power	DC+ Terminal	DC- Terminal
Negative Ground	+12V to +54V DC	Ground
Positive Ground	Ground	-12V to -54V DC

Wiring

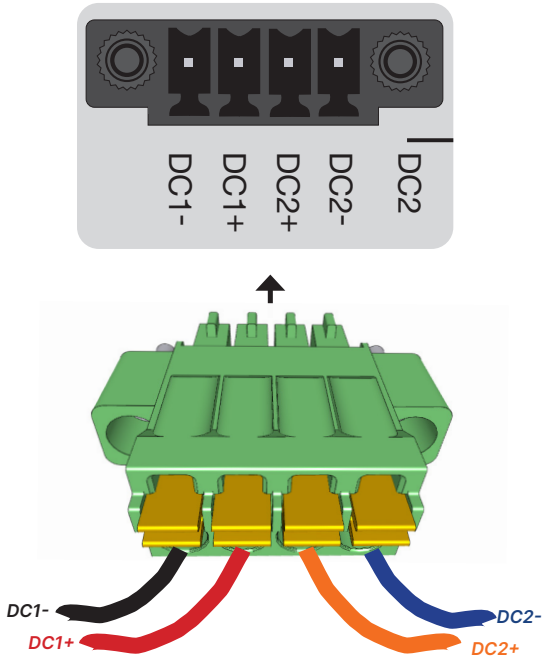

Grounding

Optional but recommended, connect earth ground using the lug plate or grounding screw.

Dimensions

NOTE: Drawings are for dimensional purposes only. Refer to pg12 for connector details.

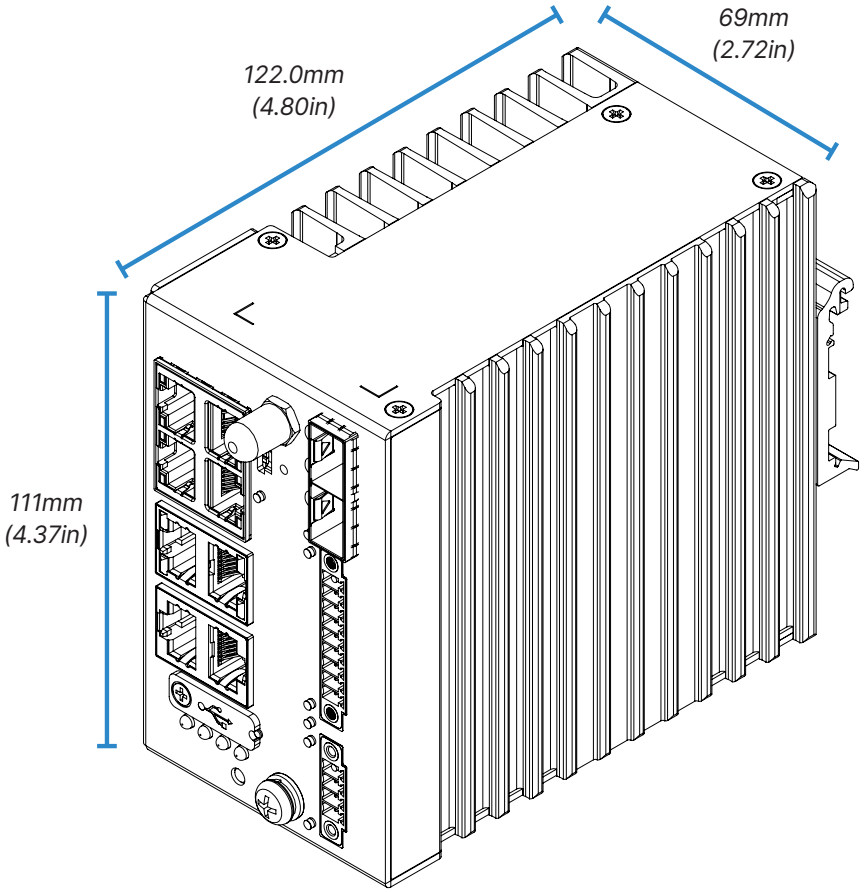

DIN Rail Mounting Bracket

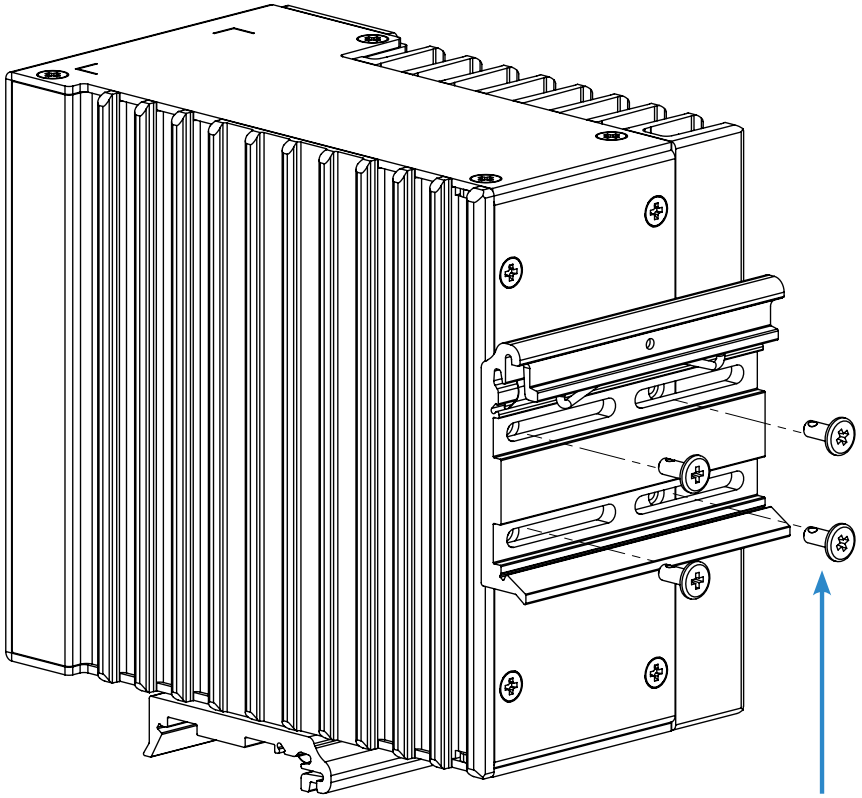

Side Panel Position

Rear Panel Position
(Includes 4x M3 Pan Head Screws)

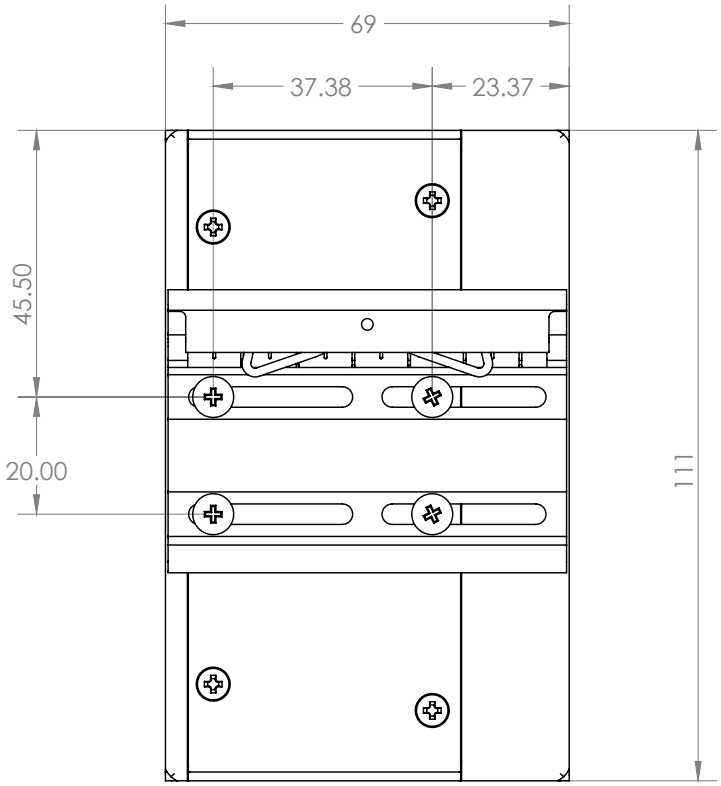

Rear Panel Position

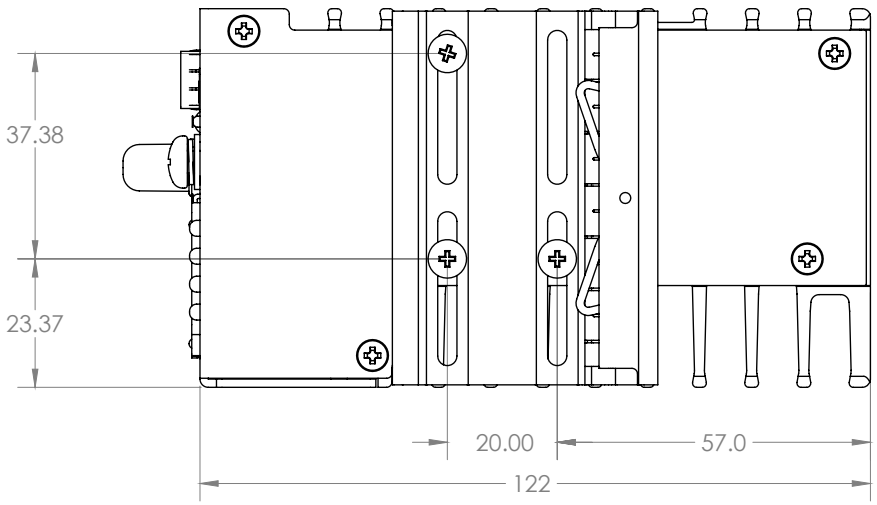

Side Panel Position

Digital I/O Connector

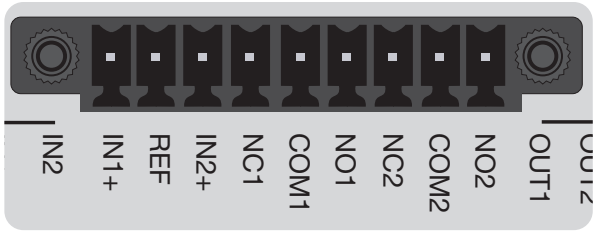

Connector	Description
IN1+	Alarm Input 1
REF	Alarm Input 1/2 Reference Ground
IN2+	Alarm Input 2
NC1	Normally Closed 1 Terminal
COM1	Common 1 Terminal
NO1	Normally Open 1 Terminal
NC2	Normally Closed 2 Terminal
COM2	Common 2 Terminal
NO2	Normally Open 2 Terminal

BIOS Options

The default CPU speed is set to high performance mode. Low power mode can be set in the BIOS options. See the Admin Guide for more information at https://docs.fortinet.com

Setup

FortiExplorer Go

Install
FortiExplorer Go

Enable
Bluetooth

Follow the on-screen
instructions

CLI

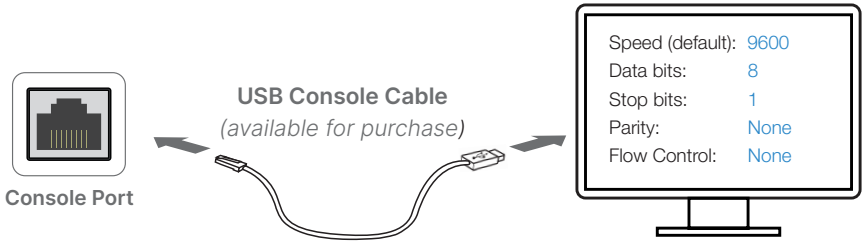

GUI

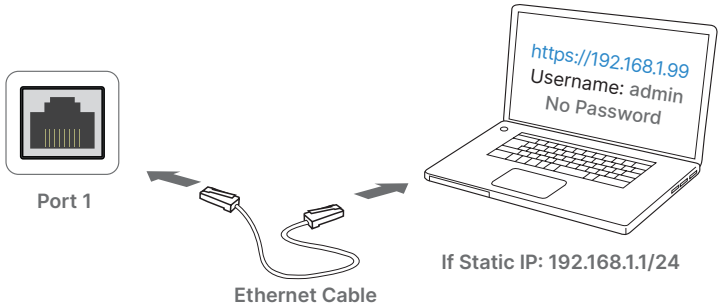

Front FGR-50G

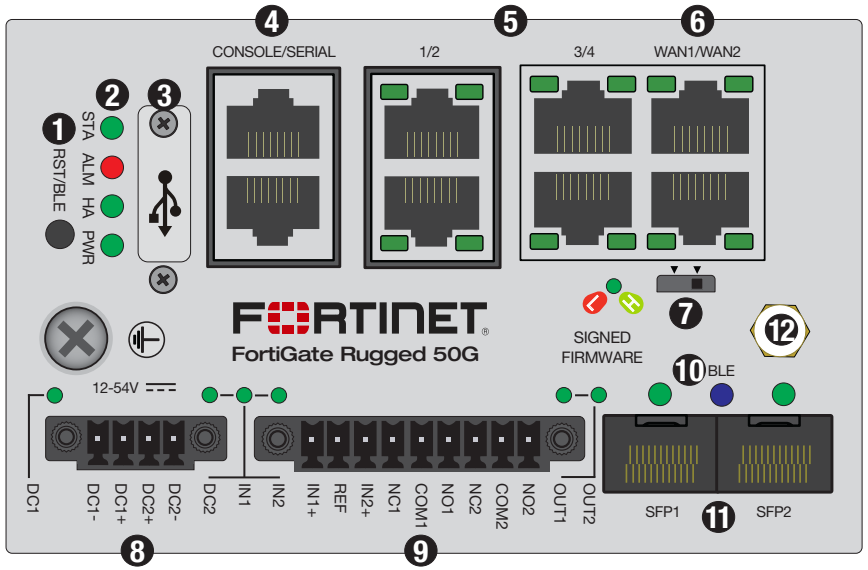

1 RST / BLE Press to enable BLE; press and hold for system reset during STA reset window

2 STA
- **Green**: Operating normally
- **Flashing Green**: Reset window
- **Off**: Device is off

ALM
- **Red**: Major alarm detected
- **Amber**: Minor alarm detected
- **Off**: No alarm detected

HA
- **Green**: HA enabled (normal)
- **Red**: HA enabled (failover)
- **Off**: HA disabled

PWR
- **Green**: Power detected
- **Off**: Power not detected

3 USB 2.0 (USB-A)

4 CONSOLE (RJ45) CLI management

SERIAL (RJ45) Data port

5 Ports 1 to 4 (RJ45)

Activity/Link (Left LED)
- **Green**: Link established
- **Flashing Green**: Data activity
- **Off**: No link established

Speed (Right LED)
- **Green**: 1 Gbps
- **Amber**: 100 Mbps
- **Off**: 10 Mbps or not connected

6 WAN1 (Top) & WAN2 (Bottom) (RJ45)

Activity/Link (Left LED)
- **Green**: Link established
- **Flashing Green**: Data activity
- **Off**: No link established

Speed (Right LED)
- **Green**: 1 Gbps
- **Amber**: 100 Mbps
- **Off**: 10 Mbps or not connected

7 SIGNED FIRMWARE BIOS Security Level

Controlled by Signed Firmware Switch, see Admin Guide at https://docs.fortinet.com
- **High**: Unsigned firmware blocked (default)
- **Low**: Unsigned firmware allowed with a warning

8 DC1 & DC2 Power Connectors Alarm disabled by default
- **Green**: Power detected
- **Red**: Alarm is on; no power detected
- **Off**: No power detected

9 Alarm Inputs (IN1, IN2)
- **Green**: Alarm defined
- **Red**: Alarm detected
- **Off**: Alarm not defined

Alarm Output (OUT1, OUT2)
- **Green**: Alarm defined
- **Flashing Red**: Major alarm detected
- **Red**: Minor alarm detected
- **Off**: Alarm not defined

10 BLE
- **Blue**: BLE on
- **Flashing Blue**: BLE in discovery
- **Off**: BLE off

11 SFP1 & SFP2 (SFP)
- **Green**: Link established
- **Flashing Green**: Data activity
- **Off**: No link established

12 BLE Antenna

Cautions and Warnings

Environmental specifications

Ambient operating temperature: -40°C to 75°C

Refer to specific Product Model Data Sheet for Environmental Specifications (Operating Temperature, Storage Temperature, Humidity, and Altitude)
Référez à la Fiche Technique de ce produit pour les caractéristiques environnementales (Température de fonctionnement, température de stockage, humidité et l'altitude).

Safety

Warning: Equipment intended for installation in Restricted Access Location.
Avertissement: Le matériel est conçu pour être installé dans un endroit où l'accès est restreint.

A skilled person must install the equipment.
L'équipement doit être installé par une personne qualifiée.

Warning: A readily accessible disconnect device shall be incorporated in the building installation wiring.
Avertissement: Un dispositif de déconnexion facilement accessible doit être incorporé dans l'installation électrique du bâtiment.

Warning: A UL Listed external disconnect device, i.e. circuit breaker or other, with over current protection suitable for local code (rated 15A recommended) shall be installed with this equipment
Avertissement: Un dispositif de déconnection externe homologué UL, exemple d'un disjoncteur ou autre, avec des protections de surintensité appropriées (nominal 15A recommandé) à l'installation de ce matériel.

CAUTION: Shock Hazard. Disconnect all power sources.
ATTENTION: Risque d'électrocution. Débranchez toutes les sources d'alimentation.

Grounding — To prevent damage to your equipment, connections that enter from outside the building should pass through a lightning / surge protector, and be properly grounded. Use an electrostatic discharge workstation (ESD) and/or wear an anti-static wrist strap while you work. In addition to the grounding terminal of the plug, on the back panel, there is another, separate terminal for earthing.

Mise à la terre — Pour éviter d'endommager votre matériel, assurez-vous que les branchements qui entrent à partir de l'extérieur du bâtiment passent par un parafoudre / parasurtenseur et sont correctement mis à la terre. Utilisez un poste de travail de décharge électrostatique (ESD) et / ou portez un bracelet anti-statique lorsque vous travaillez. Ce produit possède une borne de mise à la terre qui est prévu à l'arrière du produit, à ceci s'ajoute la mise à la terre de la prise.

This product has a separate protective earthing terminal provided on the back of the product in addition to the grounding terminal of the attachment plug. This separate protective earthing terminal must be permanently connected to earth with a green with yellow stripe conductor minimum size # 20 AWG and the connection is to be installed by a qualified service personnel.
Ce produit a une borne de mise à la terre séparé sur le dos de l'appareil, en plus de la borne de mise à la terre de la fiche de raccordement. Cette borne de mise à la terre séparée doit être connecté en permanence à la terre avec un conducteur vert avec la taille bande jaune de minimum # 20 AWG et la connexion doit être installé par un personnel qualifié.

Connect to NEC Class 2 power source
Connectez-vous à une source d'alimentation NEC Classe 2

Battery – Risk of explosion if the battery is replaced by an incorrect type. Do not dispose of batteries in a fire. They may explode. Dispose of used batteries according to your local regulations. IMPORTANT: Switzerland: Annex 4.10 of SR814.013 applies to batteries.

Batterie – Risque d'explosion si la batterie est remplacée par un type incorrect. Ne jetez pas les batteries au feu. Ils peuvent exploser. Jetez les piles usagées conformément aux réglementations locales. IMPORTANT: Suisse: l'annexe 4.10 de SR814.013 s'appliquent aux batteries.

警告
本電池如果更換不正確會有爆炸的危險
請依製造商說明書處理用過之電池

CAUTION:
There is a danger of explosion if a battery is incorrect replaced. Replace only with the same or equivalent type.
Dispose batteries of according to the manufacturer's instructions.
Disposing a battery into fire, a hot oven, mechanically crushing, or cutting it can result in an explosion.
Leaving a battery in an extremely hot environment can result in leakage of flammable liquid, gas, or an explosion.
If a battery is subjected to extremely low air pressure, it may result in leakage of flammable liquid, gas, or an explosion.

WARNUNG:
Lithium-Batterie Achtung: Explosionsgefahr bei fehlerhafter Batteriewechsel. Ersetzen Sie nur den gleichen oder gleichwertigen Typ. Batterien gemäß den Anweisungen des Herstellers entsorgen.
Beseitigung einer BATTERIE in Feuer oder einen heißen Ofen oder mechanisches Zerkleinern oder Schneiden einer BATTERIE, die zu einer EXPLOSION führen kann
Verlassen einer BATTERIE in einer extrem hohen Umgebungstemperatur, die zu einer EXPLOSION oder zum Austreten von brennbarer Flüssigkeit oder Gas führen kann
Eine BATTERIE, die einem extrem niedrigen Luftdruck ausgesetzt ist, der zu einer EXPLOSION oder zum Austreten von brennbarer Flüssigkeit oder Gas führen kann.

Regulatory Notices

Federal Communication Commission (FCC) – USA

This device complies with Part 15 of the FCC Rules. Operation is subject to the following two conditions:
(1) this device may not cause harmful interference, and
(2) this device must accept any interference received; including interference that may cause undesired operation.

This equipment has been tested and found to comply with the limits for a Class A digital device, pursuant to Part 15 of the FCC Rules. These limits are designed to provide reasonable protection against harmful interference when the equipment is operated in a commercial environment. This equipment generates, uses, and can radiate radio frequency energy, and if it is not installed and used in accordance with the instruction manual, it may cause harmful interference to radio communications. Operation of this equipment in a residential area is likely to cause harmful interference, in which case the user will be required to correct the interference at his own expense.

WARNING: Any changes or modifications to this product not expressly approved by the party responsible for compliance could void the user's authority to operate the equipment

This equipment complies with FCC radiation exposure limits set forth for an uncontrolled environment. This equipment should be installed and operated with minimum distance 20cm between the radiator and your body. This transmitter must not be co-located or operating in conjunction with any other antenna or transmitter.

Industry Canada Equipment Standard for Digital Equipment (ICES) – Canada

CAN ICES-003 (A) / NMB-003 (A)

This digital apparatus does not exceed the Class A limits for radio noise emissions from digital apparatus set out in the Radio Interference Regulations of the Canadian Department of Communications.

Cet appareil numérique n'émet pas de bruits radioélectriques dépassant les limites applicables aux appareils numériques de la classe A prescrites dans le Règlement sur le brouillage radioélectrique édicte par le ministère des Communications du Canada.

Innovation, Science and Economic Development (ISED) – Canada

This device contains licence-exempt transmitter(s)/receiver(s) that comply with Innovation, Science and Economic Development Canada's licence-exempt RSS(s). Operation is subject to the following two conditions:
1. This device may not cause interference.
2. This device must accept any interference, including interference that may cause undesired operation of the device.

L'émetteur/récepteur exempt de licence contenu dans le présent appareil est conforme aux CNR d'Innovation, Sciences et Développement économique Canada applicables aux appareils radio exempts de licence. L'exploitation est autorisée aux deux conditions suivantes:
1. L'appareil ne doit pas produire de brouillage;
2. L'appareil doit accepter tout brouillage radioélectrique subi, même si le brouillage est susceptible d'en compromettre le fonctionnement.

This equipment complies with ISED radiation exposure limits set forth for an uncontrolled environment. This equipment should be installed and operated with minimum distance 20cm between the radiator & your body.

Cet équipement est conforme aux limites d'exposition aux rayonnements ISED établies pour un environnement non contrôlé. Cet équipement doit être installé et utilisé avec un minimum de 20cm de distance entre la source de rayonnement et votre corps.

This radio transmitter (***IC: 7280B-240608***) has been approved by ISED to operate with the antenna types listed below with the maximum permissible gain and required antenna impedance for each antenna type indicated. Antenna types not included in this list, having a gain greater than the maximum gain indicated for that type, are strictly prohibited for use with this device.

Le présent émetteur radio (***IC: 7280B-240608***) a été approuvé par ISED pour fonctionner avec les types d'antenne énumérés ci-dessous et ayant un gain admissible maximal et l'impédance requise pour chaque type d'antenne. Les types d'antenne non inclus dans cette liste, ou dont le gain est supérieur au gain maximal indiqué, sont strictement interdits pour l'exploitation de l'émetteur.

This device and it's antennas(s) must not be co-located or operating in conjunction with any other antenna or transmitter except in accordance with IC multi-transmitter product procedures.

Cet appareil et son antenne (s) ne doit pas être co-localisés ou fonctionnement en association avec une autre antenne ou transmetteur.

Antenna type	Connector	Gain (dBi)	Network
Monopole	I-PEX	1.53	Bluetooth

European Conformity (CE) - EU

This is a Class A product. In a domestic environment, this product may cause radio interference, in which case the user may be required to take adequate measures.

CE

The product transmits within the frequency ranges and less than or equal to the power listed below:

Standard	Frequency Range	Transmit Power
Bluetooth	2402–2480 MHz	Less than 10 dBm (EIRP)

This equipment should be installed and operated with minimum distance 20cm between the radiator & your body.

Simplified EU Declaration of Conformity

This declaration is only valid for Fortinet products (including combinations of software, firmware and hardware) provided by Fortinet or Fortinet's authorized partners to the end-customer directly for use within the EU or countries that have implemented the EU Directives and/or spectrum regulation. Any Fortinet products not obtained directly from Fortinet or Fortinet's authorized partners may not comply with EU Directives and Fortinet makes no assurances for such products.

Български
Този продукт е в съответствие с Директива 2014/53/EC.

Česky
Tento produkt je v souladu se směrnicí 2014/53/EU.

Dansk
Dette produkt er i overensstemmelse med direktiv 2014/53/EU.

Deutsch
Dieses Produkt entspricht der Richtlinie 2014/53/EU.

Eesti
See toode vastab direktiivile 2014/53/EL.

English
This product is in compliance with Directive 2014/53/EU.

Español
Este producto cumple con la Directiva 2014/53/UE.

Ελληνική
Το προϊόν αυτό συμμορφώνεται με την Οδηγία 2014/53/ΕΕ.

Français
Ce produit est conforme à la Directive 2014/53/UE.

Hrvatski
Ovaj proizvod je u skladu s Direktivom 2014/53/EU.

Italiano
Questo prodotto è conforme alla Direttiva 2014/53/EU.

Latviski
Šis produkts atbilst Direktīvai 2014/53/ES.

Lietuvių
Šis gaminys atitinka direktyvą 2014/53/ES.

Malti
Dan il-prodott huwa konformi mad-Direttiva 2014/53/UE.

Magyar
Ez a termék megfelel a 2014/53/EU irányelvnek.

Nederlands
Dit product is in overeenstemming met Richtlijn 2014/53/EU.

Norsk
Dette produktet er i samsvar med direktiv 2014/53/EU.

Polski
Ten produkt jest zgodny z dyrektywą 2014/53/UE.

Português
Este produto está em conformidade com a Diretiva 2014/53/UE.

Rumunski
Acest produs este în conformitate cu Directiva 2014/53/UE.

Slovensky
Tento produkt je v súlade so smernicou 2014/53/EÚ.

Slovensko
Ta izdelek je v skladu z Direktivo 2014/53/EU.

Suomi
Tämä tuote on direktiivin 2014/53/EU mukainen.

Svenska
Denna produkt överensstämmer med direktiv 2014/53/EU.

Note: The full Declaration of Conformity for this product is available in the link below:
https://site.fortinet.com/ProductRegulatory/EU

Waste Electrical and Electronic Equipment (WEEE)

This symbol means that according to local laws and regulations your product and/or its battery shall be disposed of separately from household waste. When this product reaches its end of life, take it to a collection point designated by local authorities. Proper recycling of your product will protect human health and the environment.

UK Conformity Assessed (UKCA) – United Kingdom

The product transmits within the frequency ranges and less than or equal to the power listed below:

Standard	Frequency Range	Transmit Power
Bluetooth	2402–2480 MHz	Less than 10 dBm (EIRP)

This equipment should be installed and operated with minimum distance 20cm between the radiator & your body.

This product is in compliance with **Statutory Instrument 1206 Radio Equipment Regulations 2017**

The full Declaration of Conformity for this product is available in the link below:
https://site.fortinet.com/ProductRegulatory/UK

Voluntary Control Council for Interference (VCCI) – Japan

この装置は、クラスＡ機器です。この装置を住宅環境で使用すると電波妨害を引き起こすことがあります。この場合には使用者が適切な対策を講ずるよう要求されることがあります。

ＶＣＣＩ－Ａ

Bureau of Standards Metrology and Inspection (BSMI) – Taiwan

The presence conditions of the restricted substance (BSMI RoHS table) are available at the link below:
限用物質含有情況表 (RoHS Table) 請到以下 網址下載：
https://www.fortinet.com/bsmi

警告： 為避免電磁干擾，本產品不應安裝或使用於住宅環境。

請依照台灣法規處置電池。
若不正確替換電池可能導致爆炸危險，替換電池時，請使用設備生產商推薦使用的電池。
請勿拆卸、刺穿或以其他方式損壞電池。

請仔細閱讀以下說明
本設備勿置於潮濕處。
連接至電源前，請先檢查電壓。
當設備不用時，請將所有電源線拔除，避免電壓不穩而造成傷害。
勿將任何液體濺入設備中，避免線路短路。
基於安全理由，只有受到專業訓練的從業人員，才可以打開本設備。
請勿自行調整或修理已通電的設備，以確保您的安全。
如不小心受傷，請立刻找急救人員給予您適當的救護，千萬別因傷勢輕微而忽略自己的傷勢。

雷射設備非用戶維修設備，請與生產商聯繫維修事宜。

注意：要斷開電源，請將所有電源線從本機上拔下。

英屬蓋曼群島商防特網股份有限公司台灣分公司
地址：台北市內湖區行愛路176號2樓
電話：(02) 27961666

NCC警語

取得審驗證明之低功率射頻器材，非經核准，公司、商號或使 用者均不得擅自變更頻率、加大功率或變更原設計之特性及功能。低功率射頻器材之使用不得影響飛航安全及干擾合法通信；經發現有干擾現象時，應立即停用，並改善至無干擾時方得繼續使用。前述合法通信，指依電信管理法規定作業之無線電通信。低功率射頻器材須忍受合法通信或工業、科學及醫療用電波輻射性電機設備之干擾。

China

警告：在居住环境中，运行此设备可能会造成无线电干扰。

September 19, 2024

Copyright © 2024 Fortinet, Inc. All rights reserved. Fortinet®, FortiGate®, FortiCare® and FortiGuard®, and certain other marks are registered trademarks of Fortinet, Inc., and other Fortinet names herein may also be registered and/or common law trademarks of Fortinet. All other product or company names may be trademarks of their respective owners. Performance and other metrics contained herein were attained in internal lab tests under ideal conditions, and actual performance and other results may vary. Network variables, different network environments and other conditions may affect performance results. Nothing herein represents any binding commitment by Fortinet, and Fortinet disclaims all warranties, whether express or implied, except to the extent Fortinet enters a binding written contract, signed by Fortinet's SVP Legal and above, with a purchaser that expressly warrants that the identified product will perform according to certain expressly-identified performance metrics and, in such event, only the specific performance metrics expressly identified in such binding written contract shall be binding on Fortinet. For absolute clarity, any such warranty will be limited to performance in the same ideal conditions as in Fortinet's internal lab tests. Fortinet disclaims in full any covenants, representations, and guarantees pursuant hereto, whether express or implied. Fortinet reserves the right to change, modify, transfer, or otherwise revise this publication without notice, and the most current version of the publication shall be applicable.

For Product License Agreement / EULA and Warranty Terms, visit https://www.fortinet.com/content/dam/fortinet/assets/legal/EULA.pdf

FGR-50G-QSG-20240919

MIX
Paper
FSC® C198707